209 Citation Drive, Units 5 & 6
Concord, ON, Canada, L4K 2Y8
Telephone (905) 264-1414
Fax (905) 264-1147

E-mail: info@airmaxtechnologies.com
Web Site: www.airmaxtechnologies.com

MaxAir™ 30(e), 50(e), 70(e), 100(e) Mini Ducted Fan Coil Systems

Combination Heating/Cooling Equipment

Design, Installation and Maintenance Instructions

AirMax Technologies Mini Ducted MaxAir(e)™ fan coil systems

Important: Read and save these instructions.

Install in accordance with CEC and NEC; All wiring shall conform to CEC, NEC, and local building and electrical codes.

C US

CERTIFIED
FAN COIL UNITS

Intertek
NSF/ANSI/CAN 61: 2021

LISTED
PLASTIC MATERIAL
Listed in accordance with CAN/ULC-S102.2
Mounted as single units or in pairs, minimum spacing of 610 mm between units.
Flame Spread – 0 Smoke Developed - 70
Air Diffuser Assembly
Flame Spread – 0 Smoke Developed - 30
Elbow, Extender, Take-Off, Dust Cap, Click Connector

Brochure I0607B – Rev. 05-10-22

Table of Contents

INTRODUCTION **5**

BENEFITS 5
APPLICATIONS 5

PRODUCT DESCRIPTION **6**

CABINET 6
HEATING COILS 6
COOLING COILS 6
FAN 6
OFF SEASON CIRCULATION 6
WATER HEATER 6
BOILER 6

ACCESSORIES **7**

CHECK VALVE 7
CIRCULATION PUMP 7
FLOW CONTROL VALVE 7

EQUIPMENT SELECTION AND SIZING **7**

SELECTING THE NUMBER OF DIFFUSERS 8
EXAMPLE 9
DIFFERENCE IN THE NUMBER OF DIFFUSERS NEEDED FOR HEATING & COOLING 9
DIFFUSER DESIGN NOTES 10
TRUNK DUCT DESIGN NOTES 10
ELBOW AND TEE DESIGN NOTES 11
BRANCH DUCT DESIGN NOTES 11
SELECTING THE FAN COIL 11
RETURN DUCT DESIGN NOTES 11
INDOOR AIR QUALITY 12
COMBINATION MAXAIR FAN COILS AND HYDRONIC HEATING 12
LOW WATER TEMPERATURE SYSTEMS 12

INSTALLATION **13**

AIR HANDLER MOUNTING 13
DOMESTIC WATER PIPING 13
ANTI-SCALD VALVE 14
COOLING COIL & TX VALVE 14
WATER HEATER/BOILER 15
DUCTWORK 15
DIFFUSER LOCATION 15
FAN COIL PLACEMENT 15
TRUCK DUCT 16
TRUCK DUCT CONNECTIONS 16
ELBOW AND TEE PLACEMENT 16
CONNECTING THE DUCTS TO THE FAN COILS 16
BRANCH DUCTWORK 16
CONNECTING THE 2 1/2" BRANCH DUCT TO THE TRUNK DUCT 17

BRANCH DUCT TERMINATION 18
INSTALLING THE DIFFUSERS 18
AIRFLOW 18
RETURN AIR DUCT 18
CONDENSATION 18
DX REFRIGERANT COOLING 18
CONDENSING UNIT 19
ANTI-ICE CONTROL AND TX VALVE 19
EVAPORATOR COIL ASSEMBLY 20
REFRIGERATION PIPING 20
CONDENSING UNIT WIRING 20
EVACUATING AND CHARGING 20

ELECTRICAL (STANDARD UNITS) 21

THERMOSTAT 21
ELECTRICAL INFORMATION 21
CONNECTION LOCATIONS 21
CHANGING MOTOR SPEED SETTINGS 21
FIGURE 1 - CONNECTION LOCATIONS 22

ELECTRICAL (MAXe UNITS) 22

DCC7235 LAYOUT AND CONNECTIONS 23
POWER INPUT 23
CONTROL SYSTEM INPUTS 23
OUTPUTS 24
OUTPUTS WITH DIP SWITCH 26
TYPICAL HOOK UP 31
DIMENSIONS AND MOUNTING 31

START-UP PROCEDURES 31

SEQUENCE OF OPERATION 32

SERVICE AND MAINTENANCE 34

FILTER 34
DUCT CLEANING 34
COILS 34
AIR CONDITIONING COIL 34
FAN AND MOTOR 34
EXTERNAL PUMP 34

TROUBLESHOOTING 35

EXTERNAL PUMP DOES NOT RUN 35
EXTERNAL PUMP IS NOISY AT START-UP 35
WATER HEATER T&P IS WEEPING 35
INSUFFICIENT OR NO HEAT 35
COLD WATER AT HOT FAUCET 35
FAN RUNS FOR COOLING BUT NOT HEATING 35
HEATING DURING OFF CYCLE 35

WIRING DIAGRAM (STANDARD UNITS) 36

WIRING DIAGRAM (MAXe UNITS) 37

FAN COIL DIMENSIONS AND RETURN AIR SIZE AND LOCATION ……..38

HORIZONTAL AIR FLOW SPACE CONSTRAINED

EVAPORATOR COIL SIZES 42

50/70/100 COOLING COIL FILTER FRAME CABINET 43

VERTICAL AIR FLOW EVAPORATOR COILS ……44

1, 1.5, 2 TON EVAPORATOR COIL SIZES ……45

2, 2.5 TON EVAPORATOR COIL SIZES ……46

SAMPLE PIPING SCHEMATICS 47

TERMS AND CONDITIONS OF SALE 51

WARRANTY REGISTRATION 52

WARRANTY PARTS REQUEST 53

TEMPORARY HEAT DURING CONSTRUCTION 54

INTRODUCTION

The **MaxAir(e)**™ line of combo air handlers is specifically designed for use in residential and commercial combination space and water heating systems (Combo Systems). Combo heating systems use the home's water heater or boiler to provide both space heating and domestic hot water, eliminating the need for a furnace.

Combo heating systems are ideally suited for single family homes, townhouses and apartments where the use of a furnace may not be feasible or where space requirements are limited. They can also be used for additions, renovations, and finished basements as a replacement for, or in addition to the existing heating system. Our air handlers are the smallest units available in their capacity range.

The **MaxAir(e)**™ line of air handlers are designed to take the guess work out of system sizing and installation. Matched specifically to common water heater and boiler sizes, our air handlers can be quickly sized using the quick sizing information in our ***Equipment Sizing Manual***. For applications requiring special consideration, our detailed sizing method gives you the ability to size the air handler to ANY operating condition. Call for answers to any questions related to sizing, installation or trouble-shooting for any of our air handlers or water heaters.

We provide you with the quietest operating air handler available. By using large capacity, high output heating coils, our product delivers more heating per volume of air than any of our competitors, which means warmer delivered air temperatures. Our blower fans are also the widest available in their size range, which translates into slower fan speeds to deliver the same amount of air. All these features add up to warmer, more comfortable air, quiet operation, and a satisfied customer.

Water heaters, boilers and air handlers can be purchased from a wholesale supplier, rented from your Gas Utility, or purchased from **Airmax Technologies** as part of a complete heating package.

Benefits of the MaxAir(e)™ Mini Ducted *systems* are:

- Vents can be located in low traffic areas on the floor, walls, or ceiling, or in a kick space.
- A HVAC tradesman can install a system using these design and installation instructions.
- Small diameter supply ducts eliminate the need for large sheet metal ducting and allows smaller bulkheads.
- Can be installed in existing structures with minimal structural changes.
- Provides a quiet, draft free environment.

MaxAir(e)™ Mini Ducted *systems* applications:

- Retrofit construction to add heating, cooling, humidification, or filtration to a building.
- New construction to deliver air throughout the entire building envelope (eg. services 3 story townhouses more effectively than conventional furnaces).
- New and retrofit construction to reduce bulkhead sizes required for duct work.

PRODUCT DESCRIPTION .

cabinet

All cabinet panels are insulated and have a tough, durable low maintenance galvanized finish inside and out for extra long life.

The air handler can be suspended with 4 resilient hanging straps. Hanging straps can be secured at all corners, using existing screw locations without fear of damaging internal components.

Cabinet dimensions are designed to provide maximum installation flexibility. Refer to installation requirements for more details.

heating coils

All heating coils are potable water grade copper suitable for use in plumbing systems. No lead solder is used in any component construction. All coils and internal piping conform to ASTM B68 or ASTM B88 standards.

High density aluminum fins provide maximum heat transfer for small coil surface. Lower air flow and higher fin density equals warmer, more comfortable air with much less fan noise than other air handlers.

cooling coils

All Airmax accessory slab cooling coils are shipped with the liquid and suction lines piped to the exterior of the unit casing. A TX valve where included, is shipped installed.

High density aluminum fins provide maximum heat transfer for minimal coil surface. Coils are sized for low face velocities to prevent carry over and the galvanized unit drain pans are below the entire coil including the return bends and suction header.

fan (standard unit)

All fans are wide body dynamically balanced for extra quiet operation.

Three speed motors allow for separate speeds for heating, cooling, and continuous run, providing the installer or home owner maximum choice of options.

Multi-directional sleeve bearing motors allow mounting in any direction for maximum installation flexibility.

fan (e unit)

Variable speed motors allow for discrete and selectable speeds for heating, cooling, and continuous fan, providing the installer or home owner maximum choice of options.

off-season circulation

An off-season circulation cycle is included on the air handler to provide periodic circulation of water through the space heating loop during periods of infrequent use.

water heater

Any properly sized gas, propane, or oil fired water heater will work in a combo heating system. Make sure the water heater being used is approved for combo applications. (Most manufacturers' heaters are approved.) Warranties are typically not affected by using a water heater in combo applications.

boiler

All **Airmax Technologies** combo air handlers are compatible for use with boilers or instantaneous water heaters. Contact your Airmax Technologies representative for specific installation details.

ACCESSORIES

check valve

Check valves serve two purposes:

- protect against back-flow of water to avoid short circuiting around the water heater during domestic water use.
- protect against thermal siphoning.

Thermal siphoning is flow of water through the space heating circuit while the circulating pump is not operating due to hot water rising by natural convection. This phenomenon is of little consequence during winter months, but during the summer this will cause overheating, interfere with air conditioning, and waste energy.
The check valve is supplied an integral part of the circulating pump.

circulating pump

Air handlers come with external, field installed pumps, for flexibility and service. The circulating pump is matched for maximum performance for combo use utilizing a storage type water heater. Contact your Airmax representative for applications other than storage tanks.

flow control valve

An adjustable flow control valve is recommended to optimize system performance and ensure that the output from the water heater is stable. Any throttling type valve may be used, but for convenience, **AirMax** can include a valve, at additional cost, with each air handler for field installation.

Combo heating systems function poorly if the temperature drop through the air handler's coil is not maintained between 20-30°F (11-17°C). The only way to adjust the water temperature drop through the coil to match the rated output conditions of the coil is to adjust the flow of water.

The performance relationship between the air handler and the water heater is ignored by most manufacturers. The **MaxAir(e)**™ combo fan coil system has been specifically designed to optimize the output of the water heater to which the air handler is attached.

- If the temperature drop is less than 20°F (11°C), the system has an excessive flow rate. This will cause turbulent mixing within the water heater storage tank, reducing the domestic water capacity, and creating large fluctuations in delivered water temperature.
- If the temperature drop across the heating circuit is greater than 30-40°F (17-22°C) there is inadequate flow. This will cause poor heating performance of the air handler and can cause stacking of the water heater leading to unsafe water delivery temperatures for domestic use.

EQUIPMENT SELECTION AND SIZING

This section of the manual is to assist the designer of the **MaxAir**™ Mini Ducted Combo fan Coil System in the quantity and placement of outlets, the size and location of the supply duct, and the size and location of the fan coil. To size a **MaxAir**™ system for a residence, it is necessary to have an accurate heat loss/gain done for the structure in order to eliminate improper sizing.

After completing the room by room load calculations, select the **MaxAir**™ model unit that will properly meet the load requirements.

selecting the number of diffusers

From the recommended number of diffusers indicated in Table 1, determine the number of diffusers needed. It is recommended that you ***design for the median number of diffusers***. This will yield favorable system noise levels and minimize potential nuisance equipment failures. ***If a cooling coil is to be included always design for at least the median number of diffusers***.

Table 1 Recommended Number of Diffusers

Model	MaxAir 30	MaxAir 50	MaxAir 70	MaxAir 100
Btuh Heating @180°F E.W.T.	39,382	55,649	77,981	98,593
Btuh Heating @170°F E.W.T.	35,769	49,971	69,804	89,630
Btuh Heating @160°F E.W.T.	32,159	44,700	58,902	80,666
Btuh Heating @150°F E.W.T.	28,553	39,086	50,519	71,704
Btuh Heating @140°F E.W.T.	24,951	35,195	46,278	62,741
Btuh Heating @130°F E.W.T.	21,356	30,250	41,000	53,500
DX Cooling (Tons) (1)	1	1 to 2	2 to 2 ½	2 ½ to 3
C.F.M. @ 1.5" E.S.P.	350	580	750	950
HP-RPM (e)	1/3-1,800	1/2-1,800	3/4-1,800	1.0-1,800
HP-RPM (PSC)	1/3-1,625	1/2-1,625	3/4-1,625	3/4-1,625
FL Amps @ 120/1/60 (e)	5.6	7.7	9.9	11.6
FL Amps @ 120/1/60 (PSC)	5.1	6.9	9.5	9.5
G.P.M. Flow rating	5	5	7	8
Fan Coil Size (L/W/H)	30"x14"x18 1/2"	30"x14"x18 1/2"	36"x19 1/2"x18"	36"x25 1/2"x18"
Supply Air Size	8”	8"	8"	10"
Return Air Size Required	12" x 14" min.	12" x 14" min.	16" x 15" min.	16" x 16" min.
Minimum Outlets (2)	7 (3)	13 (3)	16(3)	19(3)
Maximum Outlets	11	17	20	25

Table 2 Recommended Number of Diffusers ECM Motor (e) Units

Model	MaxAir 30e	MaxAir 50e	MaxAir 70e	MaxAir 100e
Btuh Heating @180°F E.W.T.	39,382	55,649	77,981	98,593
Btuh Heating @170°F E.W.T.	35,769	49,971	69,804	89,630
Btuh Heating @160°F E.W.T.	32,159	44,700	58,902	80,666
Btuh Heating @150°F E.W.T.	28,553	39,086	50,519	71,704
Btuh Heating @140°F E.W.T.	24,951	35,195	46,278	62,741
Btuh Heating @130°F E.W.T.	21,356	30,250	41,000	53,500
DX Cooling (Tons) (1)	1	1 to 2	2 to 2 ½	2 ½ to 3
C.F.M. @ 1.5" E.S.P.	350	580	750	950
HP-RPM (e)	1/3-1,800	1/2-1,800	3/4-1,800	1.0-1,800
HP-RPM (PSC)	1/3-1,625	1/2-1,625	3/4-1,625	3/4-1,625
FL Amps @ 120/1/60 (e)	5.6	7.7	9.9	11.6
FL Amps @ 120/1/60 (PSC)	5.1	6.9	9.5	9.5
G.P.M. Flow rating	5	5	7	8
Fan Coil Size (L/W/H)	30"x14"x18 1/2"	30"x14"x18 1/2"	36"x19 1/2"x18"	36"x25 1/2"x18"
Supply Air Size	8”	8"	8"	10"
Return Air Size Required	12" x 14" min.	12" x 14" min.	16" x 15" min.	16" x 16" min.
Minimum Outlets (2)	5 (3)	10 (3)	16(3)	22(3)
Maximum Outlets	11	17	20	28

(1) Smaller condensers maybe matched to fan coil when required (match TXV to condenser size)

(2) The median number of outlets should be used to achieve maximum DX cooling capacity for each model size. Eg. If 2 ½ tons are required in a Max 70 system you must use minimum 20 outlets. Heating capacity based on 70°F return air, high speed, 10’ duct length per branch and no cooling.

(3) Contact factory for minimum number of outlets if using less than maximum DX cooling capacity.

Divide the chosen number of diffusers into the building load and this will give the capacity per diffuser. Referring back to the building heat loss you can divide the total heat load per zone by the capacity per diffuser, giving you the quantity of outlets needed per room.

example

Fan coil model: MaxAir 50 with 180°F water
Building heat loss: 51,000 BTUH
Building heat gain: 18,000 BTUH
Number of outlets: 17
Cooling coil: 1.5 tons
Heating coil: 55,649 BTUH

Calculation:

55,649 btuh/17= 3,273 btuh/outlet (heating)

and

18,000 btuh/17= 1,058 btuh/outlet (cooling)
If a room has a heat loss of 4,500 btuh and a heat gain of 2,400 btuh, 3 diffusers are required.

difference in number of diffuserers needed for heating and cooling

There may be cases in which the number of outlets needed for heating may be significantly different than the amount needed to meet the cooling load for the room. If this happens, then you will have to take the greater number of outlets to provide both heating and cooling for the room. If there is a large difference in the number of diffusers required for heating and cooling, then vents can be opened or closed to provide summer/winter adjustment.

diffuser design notes

Unlike conventional systems it is not necessary to locate **MaxAir**™ diffusers above/below windows or to center diffusers along an exterior wall length. Diffusers can be located on interior walls if necessary but if possible keep them closer to exterior walls for maximum occupant comfort.

Air from the diffuser is introduced into the room at a high velocity. This creates a venturi effect at the diffuser. This negative pressure draws room air into the conditioned air stream and mixes and distributes both air streams together. This phenomenon constantly stirs the room air and prevents stratification and stale air accumulation.

It is preferred to locate the diffusers in low traffic areas of the room to be conditioning. Diffusers should be located at least 8 inches (to center of diffuser from finished surface) from walls and should not be located near curtains or wall coverings that will be affected by the high velocity air stream. The diffusers should not be located under furniture or near obstructions that will nullify the mixing effect that the diffusers are designed to accomplish. In kitchens or bathrooms where it may not be desirable to locate a diffuser on the floor the diffusers can be located in a kick space or on the wall and discharge the air horizontally. In a kick space the diffuser may have to be trimmed to fit properly. In the bathroom do not locate in an area that will cause a draft on people entering or leaving a bath or shower.

trunk duct design notes

The location of the main trunk duct will be determined by the structural design of the building. One of the main goals in laying out the trunk duct is to achieve a self-balancing system.

A common location for the horizontal trunk duct is along the main structural support beam, at the center of the building in the basement, and at right angles to the floor joists. This will yield the shortest and most equidistant 2 ½” branch runs as possible. Utilizing this layout will provide a self-balancing system for the main floor and basement.

A common location for the vertical trunk duct on a two storey building is in a closet or furred wall as close to the building center as possible. This will allow the second floor horizontal trunk duct, (located in the attic) run at the building center line, to be divided 50/50, front to back, with equidistant branch run lengths, to again be self balancing for the second floor. Where the **MaxAir**™ fan coil unit has two trunk ducts ensure the trunk ducts are as close as possible in equivalent length.

For trunk duct runs it is recommended that the duct be insulated to prevent supply air temperature losses/gains. Where the trunk duct is run through unconditioned spaces the duct must be insulated and provided with a vapor barrier to meet the local code requirements. In unheated attics the trunk duct should be laid on the ceiling joists, insulated and provided with vapor barrier, then the attic insulation should be laid over top of the duct to further reduce duct losses/gains. In conditioned spaces and if the trunk duct is less than 25% of the maximum allowable trunk duct length (Table 2) the duct can be left un-insulated.

If the trunk duct approaches the maximum allowable length additional branch ducts may be necessary to compensate for main duct pressure and temperature losses/gains.

Connection sizes for the different cabinet sizes are 8 & 10". The MaxAir 30, 50, 70 cabinets have an 8” connection and the MaxAir 100 cabinet has a 10” connection. It is recommended that the trunk duct be started at 8" or 10” diameter minimum even if a smaller diameter duct will handle the design number of outlets. After 30' in length the duct can be reduced in size if required (reduce at a rate of one size per 10' length maximum).

Table 2 Maximum Allowable Trunk Duct Length

Duct Size	Maximum Length	No. of Take Offs
4"	20'	2
5"	30'	4
6"	50'	10
7"	60'	16
8"	70'	20
10"	100'	28

elbow and tee design notes

It is recommended that you avoid immediate disturbances in the airflow for at least 18" from the plenum. If possible allow 18" before installing any tee, or saddle. Adjustable elbows can be incorporated. Avoid installing saddles within 18" from the unit discharge unless all saddles are to be located within close proximity to the unit. When utilizing tees that deflect both air steams at 90° angles maintain a 50/50 split on the air stream. When using tees that deflect one air stream at 90° maintain a 70% straight through to 30% at right angle ratio. These are approximate ratios plus/minus 10%.

branch duct design notes

Branch duct runs should be kept at the same length and approximately 10' long. Adjustable dampers are included with the diffusers to compensate for different duct lengths. The minimum branch duct run is 5' and the maximum recommended where possible is 15'. When longer runs are utilized the airflow and the BTU delivery is reduced. In an attempt to compensate for long duct lengths use Table 3 to determine the correction factor for losses on long branch duct lengths.

Table 3 Branch Duct Correction Factors

Branch duct length	10'	15'	20'
Correction multiplier (insulated)	0	.90	.75

To the btuh capacity per diffuser determined earlier and based on the length of branch duct required between the trunk duct and the diffuser apply the above multiplier to determine the corrected btuh capacity per diffuser. This correction applies to both heating and cooling capacities. Should additional branch ducts be required in certain zones consult Airmax Technologies before adding them. ***Do not run un-insulated duct in unconditioned spaces.***

selecting the fan coil

Once the heat load and the corrected number of outlets required is known for the job you can then finalize the model of the **MaxAir**™ fan coil(s) you need.

return air duct design notes

The return air is to be sized as per local building codes and good practices. Take note of the reduced CFM of the units, compared to standard heating and cooling equipment. The return air is to be sized on a 0.15" w.g. as compared to 0.10" w.g. on conventional air systems. It is good design practice to line the first five feet of the return air duct with a sound acoustic insulation. This will reduce sound transfer through the duct and operating sound levels. The maximum length for an individual return air duct is fifty feet.

It is recommended to install a grill which is 10-20% larger than the return duct area to ensure adequate free area and no velocity noise at the grill. Where allowed by local codes, a single return air grill may be used. When using flexible duct for return air, use one size larger duct due to the higher friction loss.

For areas that require fresh air make-up (either direct or through an ERV or HRV), an intake may be installed in the system. Size and insulate the fresh air supply as per local code. Remember, should you install a duct that is too large, the excess fresh air will increase the system operating cost and effect overall equipment capabilities. It is recommended to install a well fitted damper

into the return air plenum. The damper can then be adjusted to supply the exact amount of fresh air needed to meet local building codes. Optionally, a smaller diameter fresh air duct can be used and sized for a 0.15" w.g. pressure drop.

indoor air quality

The main factors of indoor air quality are air filtration, humidity control, and fresh make-up air. All of these factors can best be achieved with a continuous run fan system. It is important to have a good quality air filter for your **MaxAir**™ fan coil system. Maintaining a clean air filter will increase the unit life span, allow the unit to operate efficiently and effectively, and will provide clean air for the occupants.

Humidity control is also an important factor to indoor air quality. Too much humidity can result in problems with bacteria, fungi, and mites. Too little humidity can result in respiratory problems, allergies, and asthma. An RH level of 35 - 45% is recommended. When a drum, power mist, or curtain flow type humidifier is used, the humidifier must be mounted on the return air duct and transitioned to a 2 ½" branch run to the plenum. Make certain the opening in the supply air plenum is no larger than 1".

When installing a steam humidifier special attention is required when installing the discharge hose. Although the humidifier installation manual may state that the discharge hose is to be mounted in the supply air plenum, this is not be the case in the **MaxAir**™ fan coil system. The discharge hose must be mounted in the return air plenum. The reason for this is because the high static pressure in the supply plenum is greater than that found in the discharge hose and will not allow the steam to exit the hose. Even in areas where there is no building code requirement for fresh air make-up, it is recommended to install a fresh air duct. In airtight buildings, the off-gassing of VOC's (volatile organic compounds) from building materials can be detrimental to the indoor air quality.

combination MaxAir™ and hydronic heating

One of the benefits of using a hydronic system is the versatility that you have when designing the heating system. Radiant underfloor heating is an excellent system, but it does have limitations. You cannot have cooling, air filtration, and humidification with a radiant heating system. Similarly, a **MaxAir**™ system may not be an option for a house with high localized heat losses/gains.

For example, a room in a house with large window and very little insulation. Retrofitted radiant floor heating may be unable to meet the BTU requirements to heat the room. With a **MaxAir**™ combo fan coil we can heat this room, but would have an excessive number of outlets in a small area.

It is in rooms such as this that a hybrid system of both radiant heating and a **MaxAir**™ fan coil would be the optimum system to provide comfort conditioning. This will provide the homeowner with good indoor air quality, and warm floor comfort.

One of the most common approaches to heating with a hybrid system is using the **MaxAir**™ fan coil to provide the comfort conditioning for the main floor (and second floor if applicable) and radiant tubing in the basement and tile areas. A few outlets located in the basement is recommended in order to provide good air circulation and supplementary heating if required.

low water temperature systems (combo systems with conventional hot water tanks + geothermal sytems)

Operating **MaxAir**™ fan coils in a low temperature system, care must be taken when designing and installing the system. Due to the lower air temperatures, when installing ductwork in an unconditioned space, extra insulation is recommended in order to

maintain a consistent air temperature at the outlets. The main supply plenum must be insulated and wrapped with a vapor barrier in order to meet local codes. All duct work should then be covered with another layer of insulation. Due to the fact that with lower water temperatures you get a lower supply air temperature, it is imperative that the water temperature is known at the design stage. If possible, a higher tank setting should be used, and an anti-scald valve be installed for the domestic use. The higher water temperature will increase system capacity, and the anti-scald valve will reduce the risk of scalding. Since some areas have specific regulations regarding combo systems, check your local building code for details on water tank temperatures, tempering valves, and pump timers.

cooling coil capacities

Possible cooling coil capacities are given in the Table 1.

INSTALLATION

The installer must adhere strictly to all local and national code requirements pertaining to the installation of this equipment.

Detailed instructions are shipped with all accessory items and should also be followed in detail.

air handler mounting

The **MaxAir(e)**™ combo air handler can be installed in most configurations. Some precautions must be observed for some of the possible mounting positions.

For installations where the access door faces up or down ensure the external circulating pump is not mounted with its shaft in the vertical position. The pump shaft must be mounted horizontally to avoid damage during operation.

The air handler can be mounted by securing straps through any of the existing screw holes in the cabinet. Should the existing screw be too short for securing a mounting strap, a longer screw can be used provided care is taken not to damage any internal components.
When fastening straps using screws, special care should be taken in the vicinity of the coil to avoid tube puncture.

The cabinet is designed so that the return air can be located on either side of the cabinet, through the bottom of the cabinet, or from the back. Position the filter rack so that the filter is readily accessible.

Install the air handler with the door firmly screwed in place to make certain the cabinet is mounted without racking. Provide at least 24 inches of service access clearance in front of the access panel of the air handler. zero clearance is acceptable on all other faces.

domestic water piping

Install a ½” (12mm) sediment faucet for use as a drain/purge valve. The drain valve must be located downstream of the pump and check valve, and upstream of the isolation valve (if isolation valve is present). This arrangement will allow any air trapped in the system to be easily flushed out. Follow the instructions in the *Start-up* & *Troubleshooting* sections.

Isolation valves are recommended, but not required. Installing isolation valves facilitates easy servicing and ensures positive purging of the system during start-up.

The isolation valves, if installed in the system should not be used as a throttling valve.

All joints in copper pipe must be lead free solder. All piping must be suitable for potable water use. All pipe & pipe connections shall comply with local building codes.

When soldering, special care should be taken

to not overheat the water connections on the unit. Use a wet rag or heat absorption compound to prevent excessive heat buildup.

Maximum pipe lengths for all **MaxAir(e)**™ combo air handlers can be calculated using the information in the Design Manual.

When both top and side connections are provided on the water heater, recommendations of the manufacturer or supplier should be followed regarding connection.

When the space heating loop connections are made to the domestic water connections:

- the heating loop connections should be positioned horizontally in a vertical section of the domestic water line for both inlet and outlet. Refer to the suggested piping schematic for details.
- connect the heating loop to the domestic water connections as close to the water heater as possible.

Avoid sections of pipe in the heating loop that can trap air where possible.

It is usually impossible to install a system without having at least one part of the system or heating coil able to trap air. This will not be a problem if the connection to the domestic water lines is made properly, and the system is properly purged on set-up:

- The circulating pump is capable of removing small amounts of entrained air from the heating loop.
- Following the flushing procedures in the *Start-up* section will ensure that there is no air in the system after initial set-up.
- Proper connections between the domestic water lines and the heating loop will ensure that any air that collects in the water tank, does not make its way into the heating loop.

Inclusion of air bleed valves at high points of the heating system can be included but are to be specified by the plumbing designer.

anti-scald valve

Anti-scald valves are not required for normal operation, but may be used for installations where local codes dictate a lower domestic water temperature. If an anti-scald device is to be installed, it must comply with ASSE standards no. 1016 and 1017, where applicable.

cooling coil & TX valve

The Airmax accessory slab cooling coil is shipped loose. A factory installed TX valve where applicable, is shipped with the cooling coil. The TX valve is installed onto the distributor and an external equalizing line is piped into the suction line. Detailed instructions on the TX valve and the location of the external equalizing line and sensing bulb are available from your **MaxAir**™ dealer.

When brazing care should be taken to not overheat the connections on the coil. Use a wet rag or heat absorption compound to prevent excessive heat buildup.

Once the brazed connections cool down, apply a bead of silicone sealant to the copper pipes where they pass through the rubber grommet. This will prevent air leaks and air noise.

The **MaxAir(e)**™ fan coils with the accessory external cooling coil option are a draw through design. The drain pans have to be trapped to avoid air losses. The proper height of the trap is 2 times the internal static in the unit casing. For most applications a trap height of 3" is acceptable. This is the minimum distance between the trap outlet and the bottom of the trap. The trap inlet should be higher than the outlet to allow for proper drainage.
Important*:* Fill trap with water before running the unit.
It is acceptable to vent the trap in situations with insufficient height and clearance.

In applications where a fan or motor body

block the cooling coil face a space should be left between the cooling coil discharge face and the fan coil to avoid excessive and uneven coil velocity.

water heater/boiler

Follow the water heater manufacturer's instructions for installation and start-up of the water heater. Make sure the water heater is turned off during air handler installation and service. Ensure the water heater has been refilled, and all air is purged from the system before turning on the water heater.

duct work

To minimize fan noise in the living space, it is recommended that the first five feet of return air duct be lined with acoustic insulation, when the duct directly communicates with the living space.

Return and supply air duct work should be the same size as the air handler openings up to the first branch, fitting or transition.

Warning! Special care should be taken in the vicinity of the coil to avoid tube puncture. Screw into opening flange instead of top of cabinet when fastening the supply air duct.

Engineered duct design guidelines are based on a nominal external static pressure of 1.2" wc.

diffuser location

Please refer to the duct layout that has been done for the installation. This layout has been designed to provide you with the maximum benefit from your system. Small deviations may be necessary due to existing construction. However, if large deviations must be made, for example:

- Elimination of a diffuser from a room
- Moving a diffuser more than 10 feet from its specified location
- Re-routing the main plenum

Contact your system designer before proceeding.

It is recommended to locate the diffusers at 8" on center from finished walls or corners and away from drapes or other wall coverings where construction type allows.

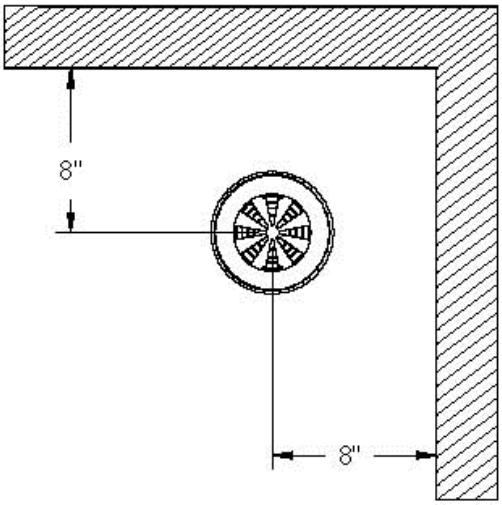

Using a 4½" hole saw, cut a hole into the floor, ceiling or wall to allow the elbow flange to fit through the hole. Secure the elbow flange to the floor, ceiling or wall with screws.

fan coil placement

The **MaxAir(e)**™ fan coil unit is to be placed according to the layout supplied by the designer. If a change in location is required, the person responsible for the design is to be consulted. The fan coil unit can be located in a horizontal or vertical position.

The location of the fan coil is not as critical as it is with conventional low velocity systems. Location of the fan coil unit will depend on:

- Minimizing all duct runs.
- Maximizing usable floor space.
- Reducing structural changes.
- Serviceability and access to the unit.
- Location of heat/cool source to fan coil.
- Available space in mechanical room.

When suspending the unit from the ceiling, it is recommended to use spring vibration isolators at each corner of the fan coil unit. This will provide a secure means of hanging

the unit, and will also reduce any transfer of vibration into the building structure. Rubber belting is also acceptable. Another common means of suspending the fan coil is with angle iron, sheet metal channel, or uni-strut placed underneath the unit, and supported by threaded rod. If this method is used, isolators (rubber or equivalent) must be placed between the fan coil unit, and the support.

Ensure that the hanging method does not hinder any piping, electrical runs, filter access, or blower access.

trunk duct

Inspect the location for the trunk duct as per the duct layout for the home or building. An important consideration in placement of the main supply plenum is that the fan coil unit must be connected to the main supply plenum. Therefore, it is necessary to have a clear path from the fan coil unit to the main supply plenum.

supply duct connections

There are numerous fittings required at this stage of the installation. These fittings may include couplings, block ends, reducers, elbows (90° and 45°), and tee's.

Place the fittings inside the pipe you intend to connect. After pushing the supply duct over the fitting as tight as possible, use four screws on each side of the connector to fasten. Locate the screws at 90° to one another. After securing the connector with the screws, be sure to ***tape or seal all joints*** to eliminate any air leaks.

elbow and tee placement

It is recommended to avoid penetrations within the first 18” of the plenum Where possible allow 18" before installing any tee or saddle. An elbow or an offset elbow can be incorporated in the 18” dimension
For best performance of the system, keep the number of elbows and tees to a minimum. When using elbows always use adjustable type elbows for **MaxAir(e)**™ systems. When utilizing tees that deflect both air steams at 90° angles try to maintain a 50/50 split on the air stream. When using tees that deflect one air stream at 90° try to maintain a 70% straight through to 30% at right angle ratio. These are approximate ratios plus/minus 10%.

connecting the ducts to the fan coils

Once the main plenum duct and the fan coil is in place, they can be fitted together. You may need to rotate the plenum in order to ensure your branch take-off lines up properly. Connecting the main supply plenum with the use of flexible duct as a connector or a canvas connector is permitted. The flexible duct should be used as a connector only. The use of flexible duct as a supply plenum is not permitted.

When ductwork is being mounted in the basement between the joists, the use of appropriate sheet metal strapping (field supplied) can be used to secure the duct to the joists. When installing ductwork in the attic, it should be laid upon ceiling joists and wrapped with insulation as per local building codes. Running the duct high in the attic increases the duct losses or gains.

branch ductwork

After the floor and ceiling holes have all been located and drilled, it is time to install all the 2½" diameter branch duct. Run the 2½" branch duct parallel to the joists whenever possible. The 2½" branch duct can then be fastened to the joist with the use of strapping material. If the 2½" branch duct is installed in an unconditioned space, it must be insulated to local code and all connections must be sealed and taped to ensure a continuous vapor seal. Do not to tear or damage the vapor barrier on the 2½" branch duct. Should it be damaged during installation the damaged portion of the branch duct/insulation must be taped (foil tape).

The minimum length of 2½" branch duct is 5', and the maximum is 15'. Should a run be shorter than the minimum flex length, the 2½" branch duct can be coiled within the cavity. The minimum bend inside diameter radius is 4". When installing the branch duct with a minimum radius ensure the duct is extended fully to allow full airflow through the elbow outlet.

Do not abuse the 2½" flex as the helix will crush and unravel.

When connecting the 2½" branch duct to the 2½" saddle, the saddle fitting needs to be inserted into the 2½" branch duct and secured with two evenly spaced TEK screws. Ensure the head of the TEK screw is seated on the wire helix as the branch duct will tear. Pull the insulation over the inner core and secure around the outside with foil tape and/or a zip tie.

When installing the 2½" branch duct in areas in which your run counters the direction of solid joists, you may need to cut a hole in the joist large enough to accommodate the branch duct providing the local building code permits.

Should this practice not be at all possible then the branch duct needs to be run below the joist.

Should you find the need to extend a branch duct from the factory supplied 10' to 15' it will be necessary to join the 2 pieces of branch duct. In order to join the two branches, a 3" piece of field supplied 2" ABS, PVC or coiled metal as a coupling needs to be inserted between the branch ducts. Use two evenly spaced TEK screws to secure the coupling on either side of the joint and tape the coupling with foil tape. Pull together and overlap the insulation and vapor barrier and tape/wrap the entire joint with foil tape ensuring no air will be able to leak out.

connecting the 2½" flexible branch duct to the supply duct

The 2½" flexible branch duct is used to connect the main supply plenum to the diffuser locations. When cutting into the supply duct, locate the 2½" saddles between the joints so as not to affect the structural integrity of the supply duct. The take off must be installed with A slight upward angle in order to keep the bend in the branch duct as gentle as possible (2 o'clock & 10 o'clock positions).

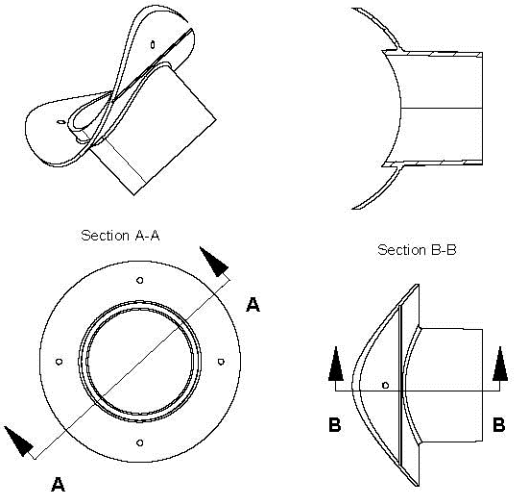

NOTE: Installations done with the main supply duct resting on trusses (e.g. In attic space) will require the take offs installed in a slight downward (4 o'clock & 8 o'clock positions). Make certain the branch duct does not create a trap.

Cut a 2¾" diameter opening in the supply duct using a hole saw, or cut by hand to suitable dimension. After all the holes have been created in the supply duct install the saddles. Place the saddles over the 2¾" holes with the gasket side toward the supply duct. Ensure that the saddle/take off rests firmly in place in the hole that you created. Firmly press the flange tight against the supply duct and screw to the surface with 4 - 3/4" self tapping sheet metal screws. It may be required to use foil tape to ensure that a better air tight seal is made.

installing the diffusers

The rough in kit is shipped in 3 pieces, the

saddle/take-off, the diffuser elbow, and the dust cap. The diffuser and damper and extension are shipped separately.

branch duct termination

The branch duct vapor barrier must not be penetrated. The flexible ductwork must be installed in a gentle manner through the floor or ceiling. The maximum bend inside diameter radius of the flexible ductwork is 4".

To complete the installation, install the diffuser elbow. Ensure that the elbow is properly snapped in place and supported to accept the friction fit Diffuser & Damper. The flex duct is factory connected to the click extension, push the click extension onto the elbow until a click is heard. No additional sealant, tape or screws are necessary.

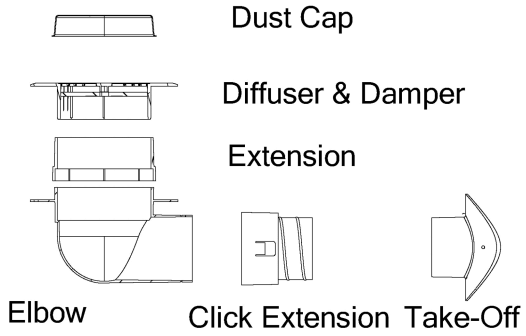

Install the branch duct as described above. Ensure the duct cap is installed to keep construction debris out of the duct.

Once the finished surface is complete remove the dust cap and install the friction fit diffuser & damper. An extension is available if the finished surface is too thick (eg. tile or hardwood flooring) to allow the diffuser to fit properly into the elbow.

If too much air is being supplied by a diffuser the diffuser balancing damper can be adjusted.

airflow

Once all the diffusers are installed, the airflow from the vents should be checked. If you have vents that are not blowing strongly, there are a few things to check. Make sure that the 2½" branch duct is not crushed, crimped, kinked, or torn. Check for air leaks in the ducts, and seal all leaks with tape or duct sealant, as per local codes. If some vents are still not blowing strongly find the source of the obstruction.

return air duct

The return air duct is not supplied as part of the **MaxAir(e)**™ fan coil package. It is to be supplied and installed by the installing contractor. The return air and fresh air make-up ducts are to be installed as per local building code specifications and good design practices. The first five feet of the return air duct from the air handling unit is recommended to be acoustically lined for sound absorption, when the duct directly communicates with the living space.

condensation

On units supplied with an Airmax Accessory slab external cooling coil, a drain connection is provided on the cooling coil. A drain line, with a trap must be installed *(the size of the trap is discussed in the previous section*). For cooling installations where the fan coil unit is installed in hot, humid areas, condensate may form on the outer cabinet of the unit. When this potential exists, a secondary drain pan should be installed under the entire unit. This pan should also extend under the piping connections and TX valve. This is especially critical in attic installations where condensate can cause damage to the ceiling

DX refrigerant cooling

When installing the fan coil, either in the horizontal or vertical position, make certain that the unit is installed level in order to handle condensate drainage. The condensate drain should be trapped, and the drain line sloped toward the drain at a 1/4" per foot slope. Ensure that no screws puncture the drain pan.

The Airmax Accessory slab coil must be installed in a vertical position (horizontal airflow through the coil) or condensate drainage problems will result. It is acceptable use a field supplied “A” type evaporative coil as long as the coil is located in the return air section of the system. Contact your Airmax representative for additional information.

Some building codes call for a secondary drain pan under the entire unit. Check local codes for more information. Any installation that has the potential of property damage due to condensate should have a secondary drain pan installed. If the unit is installed in a high heat and/or humidity location, extra insulation around the unit casing may be required to prevent excessive condensate from forming on the outer surface of the casing. Install the unit so that there is adequate clearance on all sides for service and for piping runs.

When connecting the refrigerant lines to the cooling coil, installations instructions with the coil should be followed. It is also recommended, but not mandatory that you install a site glass and filter/drier at the condensing unit, as well as both high and low side access ports. This is useful for both the system setup, and for future trouble shooting.

Care must be taken when mounting the Airmax Accessory slab coil to the side or back of a Airmax fan coil. This is acceptable only with the use of a minimum 6” spacer/transition. The short spacer/transition fitting will move the coil face away from the back of the fan/motor housing. Failure to do so will cause excessive or non-uniform velocity across the coil surface and may cause condensate to carry over into the fan coil cabinet.

condensing unit

Locate the outdoor unit in a suitable location, as close as possible to the fan coil. Maintain the clearances recommended by the condensing unit manufacturer’s installation manual to ensure proper airflow. The outdoor unit must be installed in a level, properly supported location

anti-ice and TX valve

MaxAir™ accessory DX evaporator coils come with an anti-ice control frost thermostat (see appropriate wiring diagram) installed on the suction line. Ensure that the TXV bulb and the frost thermostat control are fastened securely and are well insulated. **DO NOT** use a self-tightening clamp on the frost thermostat as excessive tightening may damage the thermostat.

The remote sensing bulb for the TX valve should be located on a clean, **horizontal** section of the suction line. It should be mounted on the top half of the pipe in the 2 o’clock or 10 o’clock position.

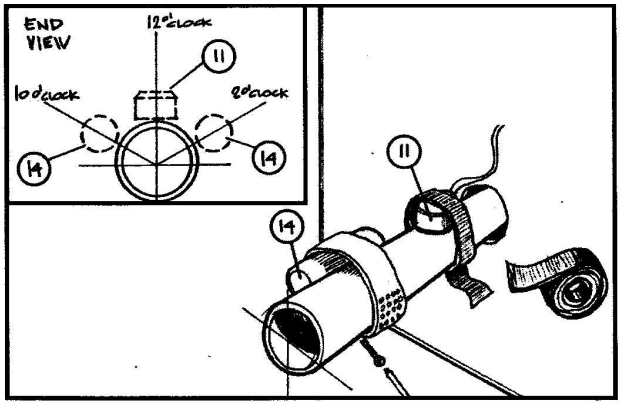

evaporator coil assembly

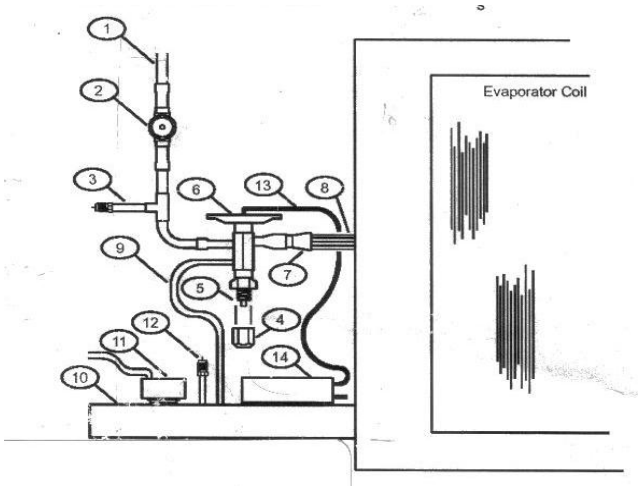

1) Liquid line
2) Site glass (not Supplied)
3) High side access port
4) Adjustment stem cap (not applicable)
5) Superheat adjustment stem (not applicable)
6) Thermal expansion valve(TXV)
7) Refrigerant distributor
8) Distributor tubes
9) External equalizer line
10) Suction line
11) Anti-ice control (Frost thermostat)
12) Low side access port
13) TX capillary tube
14) TX sensing bulb

refrigeration piping

Use only refrigerant grade pipe and fittings. Plumbing fittings may contain wax or other contaminants which are detrimental to the proper operation of the system. Insulate the suction line as per condenser manufacturer's instructions

Install the refrigeration lines as per local codes and good piping practices, supporting the pipe every 5 feet. Run the pipes in the most direct route possible, taking into account structural integrity and building finishing details. If the evaporator is located above the condenser, slope any horizontal runs toward the condenser and provide a trap at the evaporator to prevent liquid migration during the off cycle. If the condenser is located above the evaporator, a trap must be installed in the suction line at the bottom of the vertical riser. For long vertical risers, additional traps must be installed for every twenty feet. For lines running over 50', a suction line accumulator must be installed. Lines running over 100' are not recommended.

Flow nitrogen at a low pressure through the piping when welding to prevent oxidation.

condensing unit wiring

Make all connections to the outdoor unit with liquid tight conduit and fittings. Most building codes require a rain tight disconnect switch at the outdoor unit as well. Run the proper size wire to the unit, and connect as per the manufacturer's recommendations. Ensure that the unit is setup for a TX valve system. If not, a hard start kit may be required.

evacuating and charging

After the piping is installed, and all components connected, pressurize the system and check for leaks. The use of an electronic leak detector is recommended, as it is more sensitive to small leaks under the low pressures commonly used for initial leak detection.

Fill the system with nitrogen to 100 psig and test for leaks. Using a good, quality vacuum pump, evacuate the system from both the low and high side of the system to 500 microns and ensure that the system holds at the vacuum pressure. If not, check for leaks and evacuate again. If the vacuum is maintained, add refrigerant to raise the pressure to 2 psig, and either open the service valves (suction first) on pre-charged condensing units, or add refrigerant to the system until the proper operating charge is obtained.

ELECTRICAL (STANDARD UNITS) .

Warning! - All air handlers operate on 115v/1ph/60hz line voltage. All control circuits are 24 volt. Make certain the MaxAir™ unit is properly grounded. Locate air handler on a separate electric circuit as per local electrical codes.***thermostat***

The **MaxAir**™ series air handlers are compatible with any standard heat/cool, heat

pump, “electric heat”, “gas heat”, set-back or electronic thermostat.

Thermostat Heat Anticipator Setting	**0.04 amps**

Thermostats without cooling: do not connect the yellow wire at the air handler.

Thermostats without continuous run switch (fan ON): do not connect the green wire at the air handler.

electrical information

The **MaxAir**™air handler wiring diagrams are located inside of the main access panel on the control panel for easy reference during installation.

Nameplate data is located on the exterior face of the blower door.

For other electrical details and schematics, please contact your **MaxAir**™ representative.

NOTE: Total accessory amp draw must not exceed 1.0 Amp per CSA 236, C.I. 36.12.

connection locations

A terminal strip located inside the control panel is provided for the following electrical connections:

- Main power connection
- Circulation pump
- Thermostat
- Condensing unit
- Heating accessory
- Cooling accessory

changing motor speed settings

MaxAir™air handlers are equipped with three speed motors.

Factory settings are:

Cooling speed = high
Heating speed = high
Continuous run = low

Motor speeds for cooling, heating or continuous run are all field selectable, in any combination.

Changes to motor speeds are made at the unit control panel.

Warning! All connections are clearly marked. It is acceptable to put two or more fan relay connections under one terminal lug. (The unit comes factory set with both the continuous run and heating speed relay connections under the motor low speed terminal lug.) Do not use jumpers between terminal lugs. Connecting two or more motor taps together will result in immediate motor failure and possible fire hazard.

PSC MOTOR CONTROL BOARD

Figure 1 - Connection Locations

ELECTRICAL (MAXe UNITS) .

The DCC7235 is a microcontroller-based electronic volume controller for brushless dc motor-driven fan coils, furnaces or other systems. It commands discrete or variable blower speeds, torques or airflow in heating, cooling and ventilation modes from inputs provided from a discrete or proportional thermostat or controller whose switched 24VAC signal outputs activate a blower's air volume. Discrete output blower command values are selected and scaled from tables, individually selected by dip-switches. One controller can be used with several different products of different capacities. An on-board dip-switch optionally selects a 0-10V input for variable/proportional volume control. The DCC7235 can be used with proportional, 1-stage HEAT/COOL, 1 or 2-Stage COOL, and 1 or 2-Stage HEAT thermostats.

Five relay contact outputs are available for activating accessories. Two are high voltage, dry contacts. Three others switch the 24VAC (“R”) powering the controller. One of those three can be isolated from “R” by removing a shunt and providing 24VAC dry contacts.

1. DCC7235 LAYOUT

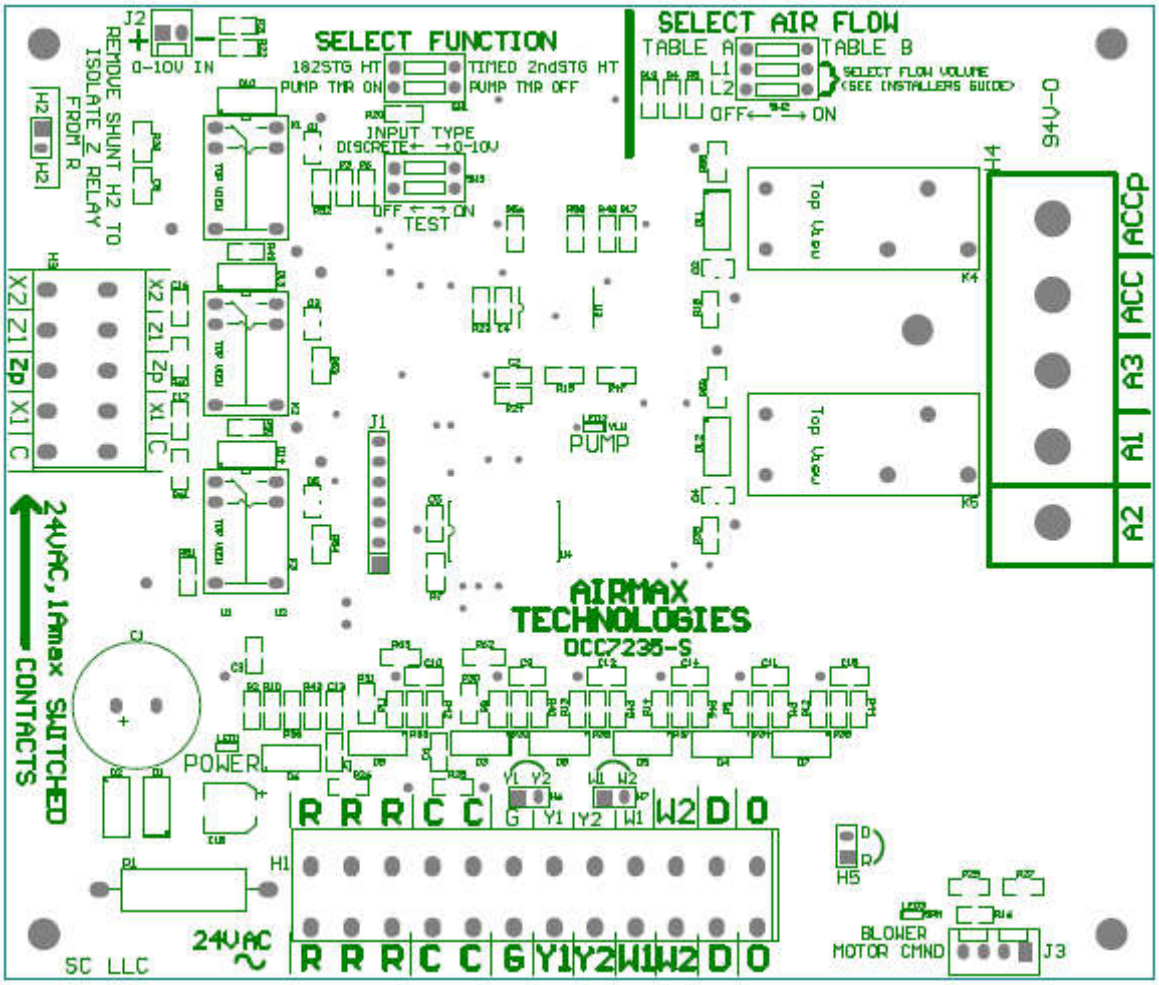

FIG 1

2. POWER:

24VAC (nominal) supplied by a Class II transformer between terminals "R" ("24VAC LINE") and "C" ("24VAC RET"). The **RED "POWER" LED** illuminates when the control is powered.
Transformer rating: 20VA minimum
Voltage: 22.5Vac Minimum, 30Vac Maximum
Current: <100ma (All outputs and relays active)

NOTE: SUPPLY 24VAC POWER FROM THE SECONDARY OF AN NEC CLASS-2 TRANSFORMER ONLY.

3. CONTROL SYSTEM INPUTS

a.) 0-10vdc Command — When SW3-1 "TEST" is **ON,** a 0-10 VDC input to J2 between Vin+ and Vin– produces a variable PWM output of 0% through 100%. **The polarity of the input signal must be observed**. See Figs 1 & 2:

Differential Input Voltage: 0 V to 10 VDC represents 0 to 100% PWM
Maximum Input V dc: +10.2 Vdc
Common Mode Voltage: - 0.2 V max negative, +5 V max positive
Signal (differential) Input impedance: >150K Ohm (Vin+ to Vin-)
Common mode impedance: > 150K Ohm to COM

ON/OFF: ON = input VDC > 0.5VDC +/- 0.1V
OFF = input VDC <0.4VDC +/- 0.1V

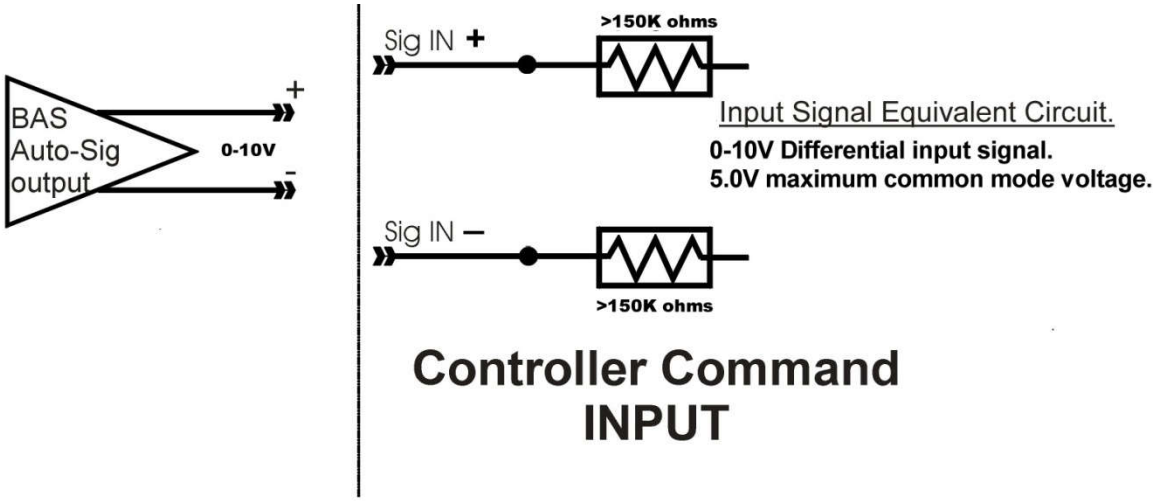

FIG 2

b.) <u>Switched 24VAC INPUTS (SW3-1 IN "DISCRETE POSITION":</u> (see para. 5.)

G – Fan Only MODE
Y2 **&** O **&** G – HIGH COOL MODE
Y1 **&** O **&** G – LOW COOL MODE
W1 – 1st STAGE HEAT MODE
W2 – 2nd STAGE HEAT MODE
Y1 **&** G **& NOT** O– Low Stage Heating (with Heat Pump)
Y2 **&** G **& NOT** O– High Stage Heating (with Heat Pump)
D – Accessory Control (Dehumidifier, Aquastat, etc). D is connected to "R" when shunt **H5** is in place. Remove H5 to control the D terminal by an external switch.

<u>b.1.) INPUTS SPECIFICATIONS</u>

<u>Input Impedance</u>:

<u>Y1 and Y2</u>

~1K Ohm between: each terminal to **C** (24VAC Return).

<u>Minimum acceptable cooling anticipator resistance</u>: 3.3K Ohms between 24Vac(R) to Y1 or Y2

<u>All other inputs:</u>

>10K Ohm between each terminal and **C** (24VAC return).

<u>Load Current FORM FACTOR — All Inputs</u>: Positive Half-Wave (with respect to C (24VAC RTN)

<u>MIN AND MAX INPUT VOLTAGE – All 24VAC Inputs:</u>

<u>Signals ACTIVE</u>: 20VAC minimum. 30VAC Maximum; Current: <15ma @30VAC.

<u>Signals INACTIVE</u>: <4VAC (Current from any signal source, switch, and/or external snubbers must hold inputs to <4VAC or DC)

<u>NOTE:</u> DO NOT CONNECT THE SWITCHED 24VAC INPUTS FROM A 2nd, SEPARATE TRANSFOMER THAN THE 24VAC SOURCE SUPPLYING POWER TO THIS CONTROL UNLESS THE TRANSFORMER SUPPLYING THIS CONTROL AND THE 2ND TRANSFORMER ARE PHASED PROPERLY WITH THEIR COMMONS CONNECTED.

4. OUTPUTS

A. CONNECTIONS TO EC MOTOR (ECM): J3 PIN-OUTS (SEE FIG 3):

J5–pin-1: **START/STOP**: When the Blower motor is commanded to operate this signal enables motor operation. (Use is optional. Use if the system requires a separate enable.)
0VDC = not enabled, 22VDC (nom) = enabled
10ma maximum sourced current.

J5–pin-2: **COMMON** – J5 Outputs Common (to **isolated** common input(s) on motor/drive). **DO NOT CONNECT COMMON TO 24VAC RET**

J5–pin-3**: PWM Motor Command**: 0% to 100% duty-cycle.
OFF: 0VDC (min). ON: 22VDC (peak). 10ma max sourced current.
When measured on a DC voltmeter, the signal level varies from 0VDC to ~22VDC max as the percent PWM duty cycle increases from 0 to 100%.
The **Green LED** "**BLWR CMND**" illuminates when the PWM command is active. Brightness increases with PWM duty cycle.

J5–pin-4: NO CONNECTION

B. HIGH VOLTAGE RELAY OUTPUTS:

a. A1, A2, A3 (PUMP) Relay (Formerly "WV RELAY")

Contacts A1 (NO), A2 (NC) to A3 (Pole): A3 is "Dry" and can be connected to an external voltage source for switching to A1, A2.
The WV Relay is energized under the following conditions:

1) SWITCH "PUMP TMR ON" POSITION, **AND**
2) Upon detecting a call for W1 or W2 (no delay) **OR**
3) If W1 or W2 was not active for 6 (or 24) consecutive powered hours.

The **green "W_TIMER" LED** illuminates when the PUMP relay is activated.

b. **ACCESSORY Relay (ACC, ACCp):**

Contact ACC (NO) connects to pole ACCp. These are DRY Contacts and can be connected to an external voltage source.
The Accessory relay is energized with **"G"**. i.e. Any call from the thermostat **that includes** an active "G" signal energizes this relay.

c. MAXIMUM CONTACT RATINGS:
8A @120 VAC (resistive)
8A @ 240 VAC (resistive)

C. LOW VOLTAGES RELAY OUTPUTS:

All Three low voltage relay contacts are rated 1AMP maximum @ 30VAC maximum.

a. **"X1" LOW STAGE "Y" RELAY (Contact X1):**

i. The LOW Stage Y relay activates upon detecting a call for "Y1" (with or without "**O**" active).
ii. Upon activation, the X1 terminal connects to "R" (the 24VAC powering the DCC7235). **This relay is NOT DRY; i.e. its pole is permanently connected to "R".**

b. **"X2" High Stage "Y" RELAY" (Contact X2):**

i. The HIGH Stage Y relay activates on a call for Y2 (with or without "**O**" active.
ii. On activation, the X2 terminal connects to "R" (the 24VAC powering the DCC7235). **This relay is NOT DRY; i.e. its pole is permanently connected to "R".**

c. **“Z” RELAY" (Contacts Z1, Z1p):**

i. The Z1 terminal switches to Zp on any “W” call (W1 or W2).

ii. **As shipped,** SHUNT H2 connects Zp to "R", i.e. **THE W RELAY CONTACTS ARE NOT "DRY" AS SHIPPED.** See diagram below.

iii. **WHEN H2 is removed** the contacts are "**DRY"** and be connected to a second, separate, isolated 24VAC power source. See diagram below.

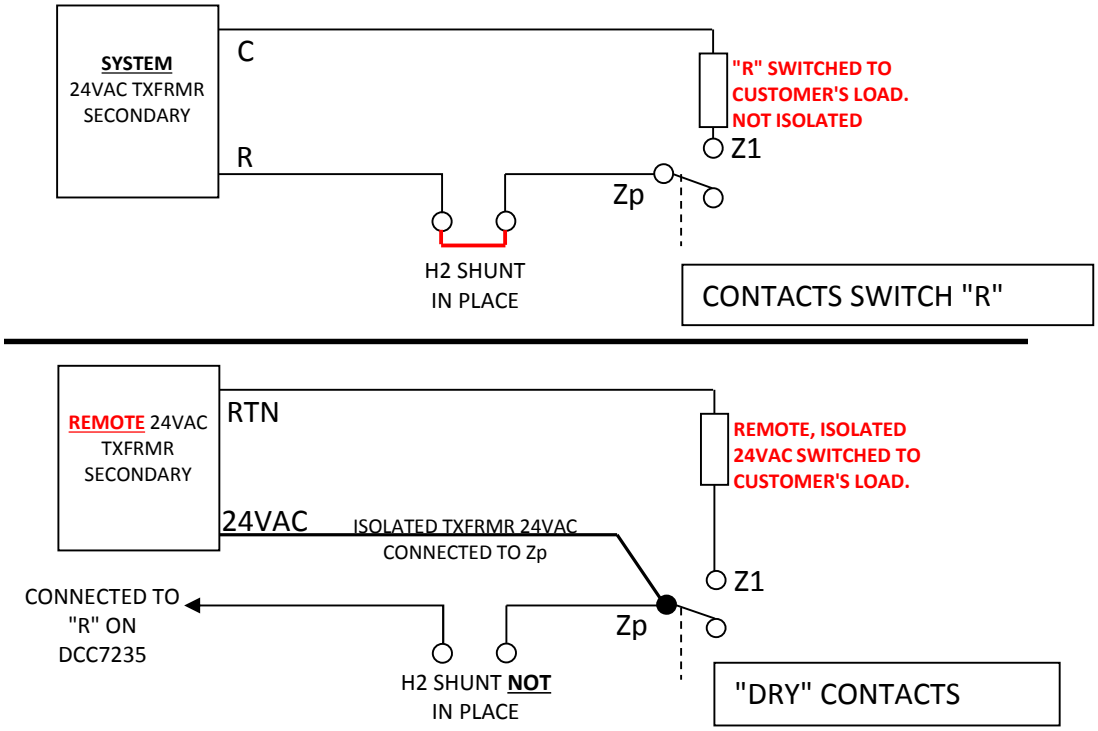

5. DIP-SWITCHES: FLOW VOLUME SELECT OPTIONS

a. DISCRETE/VARIABLE (0-10V) MODE INPUT SELECTOR (SW3-1)

1. **SW3-1 IN “DISCRETE” SWITCH POSITION: TABLE A-B PWM OUTPUT SIGNAL LEVEL SELECTOR:**
The switch labeled "TABLE A", "TABLE B" in combination with the switches labeled "L1" and "L2" select the flow levels for each of the discrete input states. Each Discrete input or combination of inputs activates a pre-programmed selection of customer-specified PWM duty-cycle output. The various combinations are used to operate equipment with different capacities. The selections are per in the tables below:

TABLE A (SW2-1) SWITCH "OFF" POSITION:

SET MAX AIRFLOW SEL 1&2	"L1,L2" SELECTIONS WITH DISCRETE INPUT TABLE A SELECTED							
	G(ONLY)	Y2 & G & /O	Y1 & G & /O	Y2 & G & O	Y1 & G & O	W1 & D	W2 & D	(W1 or W2) & /D
L1, L2=0	20%	100%	60%	100%	60%	50%	100%	20%
L1=1,L2=0	20%	100%	60%	100%	60%	35%	83%	20%
L1=0,L2=1 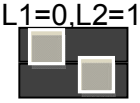	20%	83%	50%	83%	50%	35%	83%	20%
L1,L2=1	20%	83%	50%	83%	50%	25%	50%	20%

TABLE B (SW2-1) SWITCH "ON" POSITION:

SET MAX AIRFLOW (Dip-SW2)	"L1,L2" SELECTIONS WITH DISCRETE INPUT TABLE B SELECTED							
	G(ONLY)	Y2 & G &/O	Y1 & G & /O	Y2 & G & O	Y1 & G & O	W1 & D	W2 & D	(W1 or W2) & /D
L1, L2=0	20%	66%	35%	66%	35%	35%	66%	20%
L1=1,L2=0	20%	50%	25%	50%	25%	25%	50%	20%
L1=0,L2=1 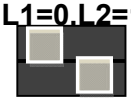	20%	35%	20%	35%	20%	20%	35%	20%
L1=1,L2=0 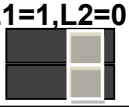	20%	25%	20%	25%	20%	20%	25%	20%

NOTE: TABLE A OR B AND SELECTIONS WITHIN TABLES A AND B BECOME EFFECTIVE WITHOUT CYCLING 24VAC POWER 2 TO 4 SECONDS AFTER CHANGING SWITCH POSITIONS.

2. **SW3-1 IN "0-10V IN" SWITCH POSITION:** Selects **CONTINUOUSLY VARIABLE** outputs per table 3, below and the command (volume) level is input via the "0-10V IN" connector:

L1,L2 SELECTIONS WHEN 0-10V INPUT ACTIVE		
SET MAX AIRFLOW (DIP-SW2)	**COMMAND INPUT RANGE**	**COMMAND OUTPUT RANGE**
L1,L2=0	**0-10V**	**0-100%**
L1=1,L2=0	**0-10V**	**0-83%**
L1=0,L2=1	**0-10V**	**0-66%**
L1,L2=1	**0-10V**	**0-50%**

TABLE3

NOTE: POWER TO THE CONTROLLER MUST BE CYCLED FOR THE DISCRETE OR 0-10V SWITCH STATE TO BE RECOGNIZED. THE SELECTED STATE BECOMES EFFECTIVE AFTER POWER IS RESTORED.

B. ONE AND TWO STAGE HEATING SYSTEM SELECTOR

1. **"1&2-STG HT" (SW1-1):** In this position, single-stage and true two-stage heat control from a thermostat is operational. The Heating inputs (W1, W2) will operate the system as follows:

   1. **OPERATING With a FURNACE ("Y" not Active in Heating)**

      D & W1 active: When "1&2-Stg HT" and D AND W1 are active, the selected output PWM % shown under W1 in TABLES A and B, above, occurs after a 15 sec delay after any W activates.

      D & W2 active: When "1&2-Stg HT" AND **D** AND **W2** are active, the selected output PWM % shown under **W2** in TABLES A and B occurs after a 15 sec time delay after W1 or W2 activate.

      W2 has precedence over W1: If either **W1** and **W2**, or **W2** alone, is active, the **W2** command output occurs.

      STAGING DELAY: There is no time delay when sequentially staging from W1 to W2 or back (i.e. without an OFF-CYCLE).

      For convenience, when a single stage HEAT system is applied, an on-board **SHUNT** connects **W1** to W**2** for operation at the **W2** airflow whenever any W is active.

NOTE: THE SHUNT MUST BE REMOVED WHEN A TWO STAGE HEATING SYSTEM IS APPLIED.

When either or both W1 and W2 are active and D is NOT active, the output will be per the column (W1 or W2) & NOT D in Tables A and B.

2-stage WIRING: True 2-stage (2-wire: W1, W2) operation requires the W1 and W2 terminals of the thermostat to be wired to W1 and W2, respectively, on the DCC7235.

1-stage Wiring: **Single stage** operation can still be achieved by wiring only W1 from the thermostat to W1 of the DCC7235 for **LOW** airflow, or W2 from the thermostat to W2 of the DCC7235 for **HIGH** airflow. W1 and W2 can also be connected (jumpered) for HIGH Airflow in 1-stage systems.

For convenience, when a single stage system is applied, an on-board **SHUNT** connects **Y1** to **Y2** for operation at the **Y2** airflow whenever any Y is active.

NOTE: THE SHUNT MUST BE REMOVED WHEN A TWO STAGE COMPRESSOR SYSTEM IS APPLIED FOR HEATING OR COOLING.

2. OPERATING with a HEAT PUMP ("Y" MUST BE Active for COMPRESSOR Heating)

D & W1 active: When "1&2-Stg HT" and **D** AND **W1** are active, the selected output PWM % shown under **W1** in the selected TABLE A and B, above, occurs after a 15 sec delay after any **W** first becomes active. A prior flow value (PWM%) selected by either **Y** will be replaced by the value selected by either **W**.

D & W2 active: When "1&2-Stg HT" and **D** AND **W2** are active, the selected output PWM % shown under **W2** in the selected TABLE A and B occurs after a 15 sec time delay after the first occurrence of **W1** or **W2**. A prior flow value (PWM%) selected by either **Y** will be replaced by the value selected by either **W**.

NOTE: WHEN EITHER OR BOTH W1 AND W2 ARE ACTIVE AND D IS NOT ACTIVE, THE OUTPUT WILL BE PER THE COLUMN (W1 OR W2) & NOT D IN TABLES A AND B.

2. "TIMED 2-STAGE HEAT" SWITCH (SW1-1) "ON"

1st stage -- D & W1 or D & W2 active: When the switch is in this position and either **W1 & D or W2 & D** are active, the volume command (PWM %) shown under **D & W1** in the selected TABLE A or B occurs after a 15 sec time delay from when W1 or W2 became active.

TIMED STAGING: When either **D & W1** or **D & W2** remain active for 5 minutes, the volume command (PWM %) transitions to the selected values shown under **D & W2** in the selected TABLE A or B, above, to give the high volume output.

When W1 or W2 is active and D is NOT active, the Output will be per the column **(W1 or W2) & NOT D** in Tables A and B.

TIMED STAGING WIRING: Either an energized W1 or W2 alone, or W1 and W2 together (for example, by connecting them together with an external shunt) will activate the timed 2-stage output.

NOTE: POWER TO THE CONTROLLER MUST BE CYCLED FOR THE 1&2-STG HT AND TIMED 2-STG HT SWITCH STATE TO BE RECOGNIZED. THE SELECTED STATE WILL BECOME EFFECTIVE AFTER POWER IS RESTORED.

C. PUMP TIMER RELAY ON-OFF (ENABLE/DISABLE)

a. **"PUMP TMR ON":** The Pump RELAY Timer functions normally and will activate per paragraph **B. a.,** above.

b. **"PUMP TMR OFF":** The Pump RELAY Timer is disabled and will not activate.

D. NORMAL &TEST MODE TIMING (SW3-2 "TEST"):

NOTE: THIS SWITCH SELECTS NORMAL OPERATION OR THE TEST MODE

PUMP SWITCH (A1, A2, A3) TIMING AND FUNCTION LOCKOUT.

THE FOLLOWING DIAGRAM SHOWS THE TIMING OF THE PUMP RELAY. ITS OPERATES WITH THE TIMING AND BLOWER AND X1,X2 RELAY LOCKOUT PERIODS SHOWN.

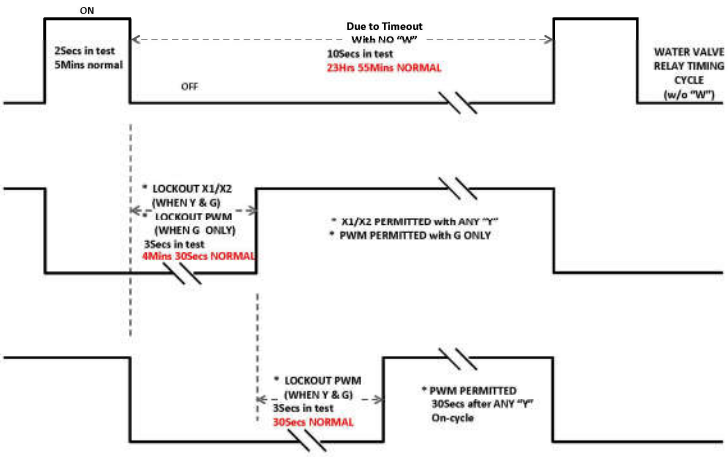

NOTE: POWER MUST BE CYCLED TO ENTER OR TO LEAVE THE TEST MODE. THE SELECTED STATE (TEST OR NORMAL OPERATION) BECOMES EFFECTIVE ONLY AFTER POWER IS RESTORED.

WIRING FOR 2 STAGE OPERATION

Two stage heating	Two stage cooling
Option 1: True 2 stage heating. On DCC7235S board, jumper is removed between W1-W2 at H7 and wires are run to W1 and W2 from 2 stage heating thermostat. Switch 1 on SW1 must be set to 1&2 STG HT. **Or** **Option 2: Timed 2 stage heating** To achieve timed two stage heating with a single stage wall thermostat, wire is run to either W1 or W2 and jumper is between W1-W2. Switch 1 on SW1 must be set to Timed 2nd STG HT (factory setting). Both settings yield air flow levels defined in Table A & Table B for W1 & W2.	On DCC7235S board when jumper is removed between Y1-Y2 at H6 and a 2 stage thermostat is wired to the board at Y1 & Y2. Both settings yield air flow levels defined in Table A & Table B for Y1 & Y2.

TYPICAL HOOKUP

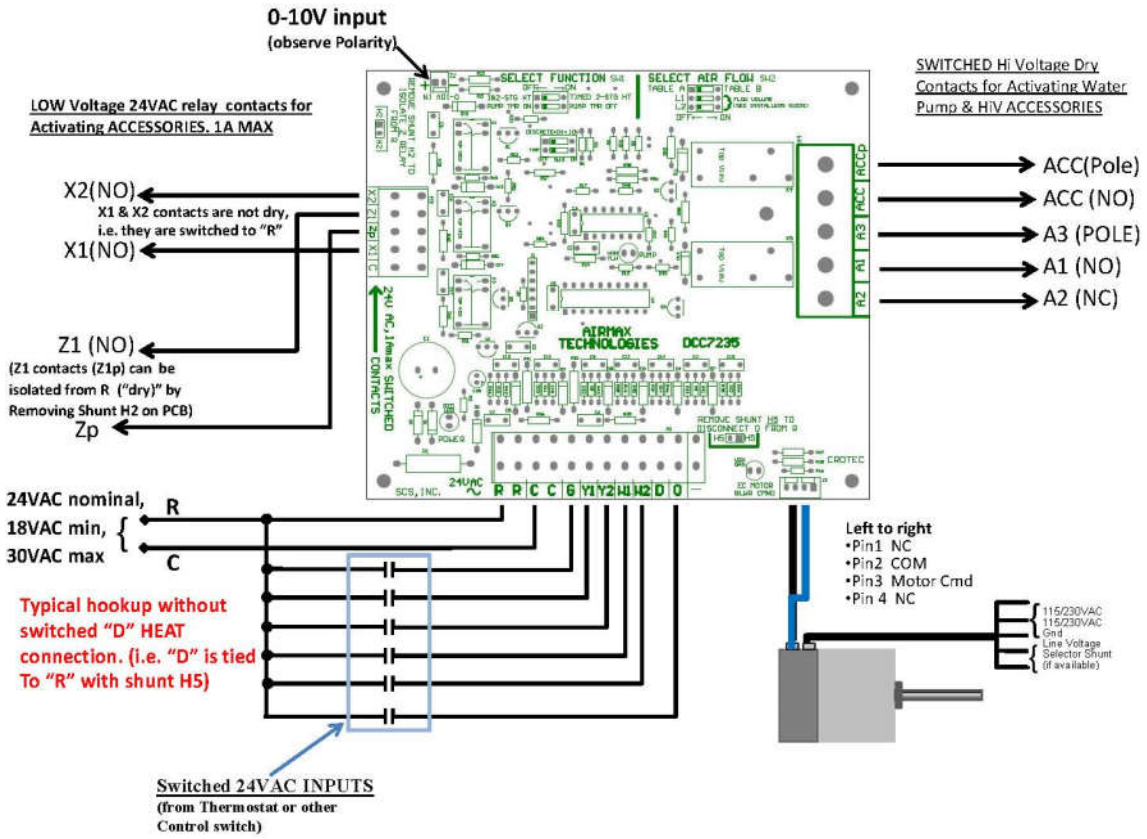

Confidential & Proprietary Information

FIG 3

6. **DIMENSIONS and MOUNTING:**

PC Board Dimensions: 4.8" x 5.66"

Mounting: 5 Nylon standoff snap-in feet
Hole centers: 4 at: corners spaced 4.5" x 5.26"
1 at: down 1.40", and in-board (left) 0.960" from center of top right corner standoff.
Recommended hole size: 0.191"

START-UP PROCEDURES .

Do not start the air handler or water heater until ALL air has been purged!

1. Fill the water heater or boiler, and or storage tank with water.
2. Purge all air for the domestic water lines by opening faucets at the remote parts of the plumbing system.

3. Purge all air from the space heating loop by closing the isolation valve on the return leg of the loop and open the drain to purge air. Open the return leg isolation valve and then close the drain valve. If no isolation valves are installed, open drain fully to purge air and let run for at least 30 seconds.
4. Start the water heater or boiler according to the manufacturer's instructions. Set the desired water temperature (140F/60C) and wait for the tank to shut off.
5. Turn on the power to the air handler and set the room thermostat for heat to energize the fan and pump. If a gurgling sound is present, it should subside within one minute. If noise is still present after one minute, repeat step 3 to purge air as necessary.
6. Grab hold of the heating lines with your hands to verify that they are getting warmer due to the hot water circulating through them. Also verify the circulating pump is operating by feeling for the vibrations. With the air handler running, ensure water flow through the circulation loop by measuring the water temperature difference. It should be in the range of 10-30°F temperature drop through the air handler with an entering water temperature between 135-180°F.

HINT: The temperature drop across the air handler can easily be measured with a probe type pocket thermometer. Wrap a rag or piece of insulation around the inlet and outlet of the heating coil to the air handler and insert the thermometer probe between the insulation and the pipe to take the reading. Wait at approximately 2 minutes to take each reading *(longer for systems with a storage tank*). Make certain to take both readings one immediately after the other. At high flow rates the temperature in the tank may drift, causing error in the calculated temperature difference, if readings are taken more than 4 minutes apart.

Ensure that all electrical connections are tight, and that any packing or shipping restraints are removed from both the fan coil, and the condensing unit. With the power to the condensing unit off, check the thermostat for normal operation, and again check that there is proper airflow from all the vents. Ensure that no branch ducts were damaged or bent sharply. Do not run the fan coil without a filter in place.

DO **NOT** LEAVE THE SYSTEM UNATTENDED UNTIL NORMAL OPERATING CONDITIONS ARE OBTAINED.

Observe the condenser pressures during the initial start-up of the system. Check the voltage and amp draw of both the fan coil, and the outdoor condensing unit. The voltages must be within 10% of the rating plate data. If more than a 10% difference is noted, contact your local electrical company. Check that the amprage draws on both the air handler and condensing units are within the information printed on the unit rating plates. Set the refrigerant charge as required for optimal performance.

SEQUENCE OF OPERATION (STANDARD UNITS) .

Refer to Ladder Diagram and Wiring Schematic for relay locations.
Note: **MaxAir**™ air handlers are equipped with 3 speed fan motors (high, medium, low). Speeds for heating, cooling and continuous run are all field selectable. Refer to *Electrical*

section for description.

Heating Cycle

1. Thermostat calls for heat, connection is made between the ("R" terminal) red and "W" terminal) white thermostat wires.
2. Heating relay is energized; closes providing power to the heating speed motor tap; opens, interrupting power to continuous run motor tap. Pump relay is energized; A1 to A3 closes.
3. When room temperature is satisfied, thermostat breaks connection between red and white wires.
4. Relays are de-energized; pump stops, fan shuts off (or switches to continuous run speed when continuous run employed).

Cooling Cycle

1. Thermostat calls for cooling, connection is made between ("R" terminal) red and ("Y" terminal) yellow thermostat wires.
2. Cooling condenser circuit energized provided field supplied freeze thermostat is closed.
3. Connection is made between ("G" terminal) green and ("R" terminal) red thermostat wire.
4. When thermostat satisfied, connection between red and yellow broken at thermostat.
5. Cooling condenser circuit is de-energized. Fan shuts off (or switches to continuous run speed when continuous run employed).

Continuous Run Cycle (Fan ON)

1. Connection is made between ("G" terminal) green and ("R" terminal) red thermostat wire.
   2. Continuous run relay is energized; fan operates on continuous run speed. (factory set to high speed).

Continuous Run Cycle (full time)

1. Connection is made between F1 and F2 terminals on the board.
2. Fan operates on continuous run speed. (factory set to low speed).

SEQUENCE OF OPERATION (MAXe UNITS) .

Refer to Ladder Diagram and Wiring Schematic for relay locations.

Note: **MaxAir**™ air handlers are equipped with a brushless dc fan motor. Speeds for heating, cooling and continuous run are all field selectable. Refer to *Electrical* section for description.

Heating Cycle

1. Thermostat calls for heat, connection is made between the ("R" terminal) red and ("W1" and or "W2" terminal) thermostat wires as set up by installer.
2 Heating relay is energized; providing power to relay A1, circulating pump connection point. After "15 second delay" to allow plenum to warm up, Fan motor starts at value selected by installer and corresponding W1 or W2 input. If 2-stage timed heat is selected at control board, fan speed will not increase to the "W2" value until after a programmed 5 minute delay
3 If R + D (optional aquastat circuit) are interrupted, motor remains at continuous low input value until circuit is made.
4 When room temperature is satisfied, thermostat breaks connection between "R" and "W1" / "W2" wires.
5 Relays are de-energized; pump stops, fan shuts off (or switches to continuous run speed when continuous run employed).

Cooling Cycle

1 Thermostat calls for cooling, connection is made between ("R" terminal) red ("G" terminal) green and ("Y1"or "Y2" terminal, factory bridged) thermostat wires, as selected by the installer.

2 Cooling condenser circuit energized provided field supplied freeze thermostat is closed.
3 After Time delay fan motor starts at value selected by installer and corresponding “Y1” or “Y2” input
4 When room temperature is satisfied, thermostat breaks connection between “R”, “G” and “Y1” / “Y2” wires.
5 Cooling condenser circuit is de-energized. Fan shuts off (or switches to continuous run speed when continuous run employed).

Continuous Run Cycle (Fan ON)

1 Connection is made between (“G” terminal) green and (“R” terminal) red.
2 Continuous run relay is energized; fan input value operates on continuous run speed.

SERVICE AND MAINTENANCE .

filter

The **MaxAir**™ series air handlers are not provided with a filter. A good quality filter should be installed and or replaced or cleaned monthly.
A CLOGGED OR INADEQUATE FILTER MAY VOID PRODUCT WARRANTY.

duct cleaning

If proper filter maintenance is adhered to, duct cleaning is not required for the life of the equipment.

coils

Air conditioning and heating coils should not require cleaning if the filter maintenance schedule is adhered to. If a filter is damaged or collapses from plugging, the coils may get fouled by dust. If this happens, replace the filter and carefully vacuum the coils. The fan may need to be removed to gain access to the face of the heating coil.

air conditioning coil

At the start of each cooling season, check the drain connection to the cooling coil to ensure it is free of debris. An easy way to do this is to blow into the tube to see if there is any obstruction. If a plugged air conditioning coil is suspected, call a service technician for testing and cleaning.

fan and motor

Check fan for dust once a year. If dirty, vacuum or wash to remove dust. Keeping the fan blades clean will reduce noise and improve the capacity and efficiency of the heating system. Take care to avoid wetting the motor! Remove the motor if required.

external pump

The circulating pump is water lubricated and should require no regular maintenance. If the pump fails to start at the beginning of the heating season, follow the instructions in the *Trouble Shooting* section of this manual below.

RUNNING THE PUMP WITH THE ISOLATION VALVES CLOSED OR WITH NO WATER IN THE SYSTEM WILL DAMAGE THE PUMP

TROUBLESHOOTING

external pump does not run

In areas where hard water is present the pump may “stick” and fail to run after long idle periods. Often this can be freed by closing the isolation valve on the return leg and opening the drain port so full city water pressure flows through the pump. If this fails to free the pump, removal for cleaning or replacement is necessary.

external pump is noisy at start-up

Air is present in heating loop. If sound has not diminished within 1 minute, purge air in accordance with the *Start-Up* procedures. Check to make sure branch connections for heating loop are horizontal.

water heater T&P is weeping

A check valve or back-flow preventor has been installed in the system. Some form of pressure relief may be required.

Options are:

- Install expansion tank.
- Install pressure relief valve; locate outlet over laundry tub or floor drain.

Install combination toilet tank/pressure relief valve

insufficient or no heat

- Plugged air filter or coil. Refer to *Maintenance* section for filter care and coil cleaning.
- Air in heating loop; purge system.
- Inlet and outlet connections to air handler backwards; reverse connections.
- Restricted or improperly installed supply tube in water heater; check and replace.
- Water heater thermostat set too low or not calibrated properly; check water temperature at a faucet. If the temperature has been set low because of homeowner preference, an anti-scald valve may be needed to provide the homeowner with the means of turning the domestic hot water down without affecting the heating output.
- Restriction in heating loop; remove restriction, check valve stuck or closed valve.

cold water at hot faucet

The most probable cause is reverse flow through the heating loop from a stuck check valve; repair or replace valve.

fan runs for cooling but not heating

Thermostat may be connected improperly. Refer to *Electrical* section for proper installation.

heating during off cycle

Probable cause is thermal siphoning. See check valve description for details; repair or replace check valve. Check elevation of air handler above water heater to see if motorized valve required for positive shut-off.

24 hr pump timer cycle is engaged. Wait to ensure pump shuts off after cycle is over (1m-15sec or 5min). Pump timer starts upon energizing of air handler with line voltage.

WIRING DIAGRAM (STANDARD UNITS)

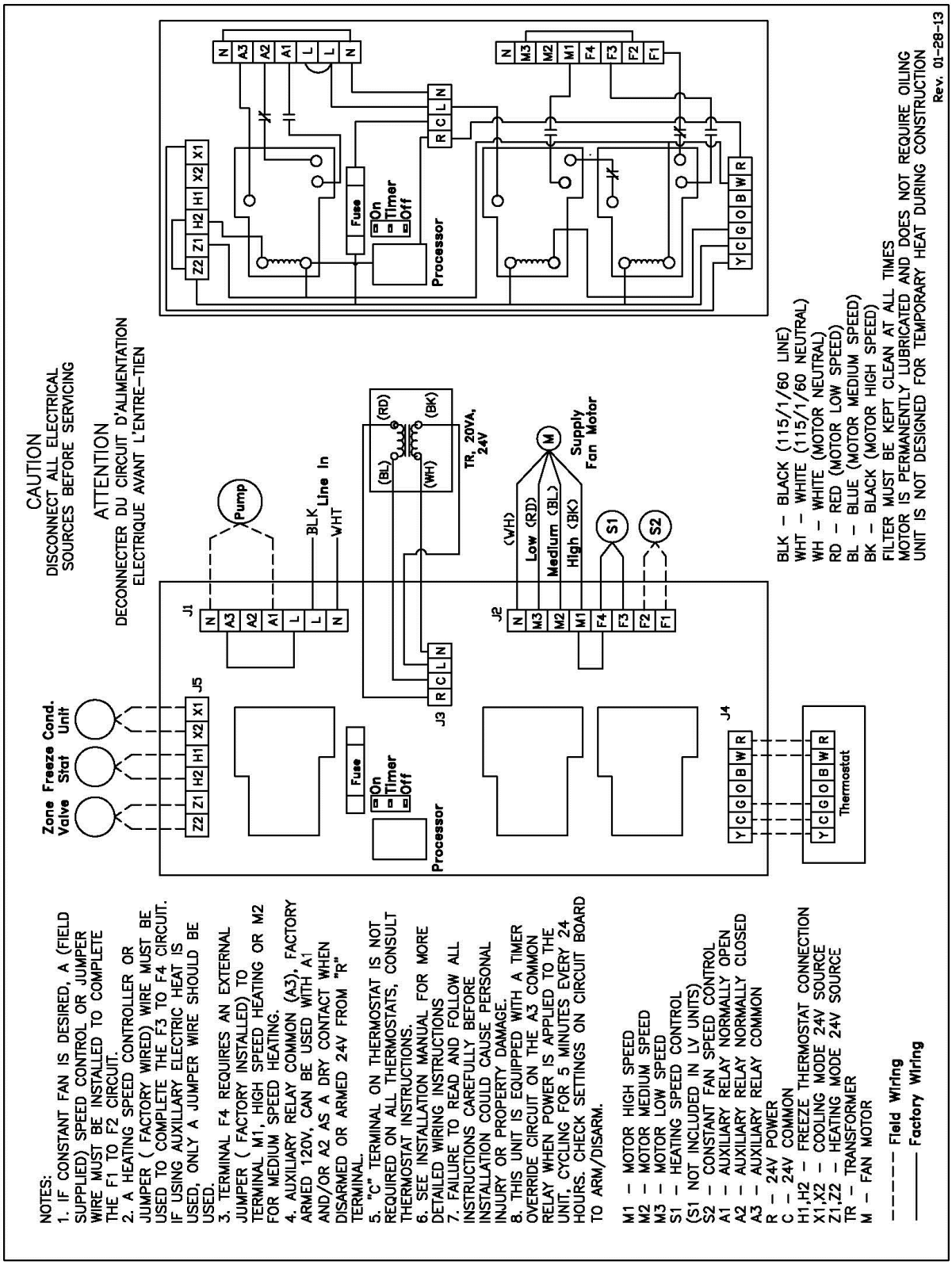

WIRING DIAGRAM (MAXe UNITS) .

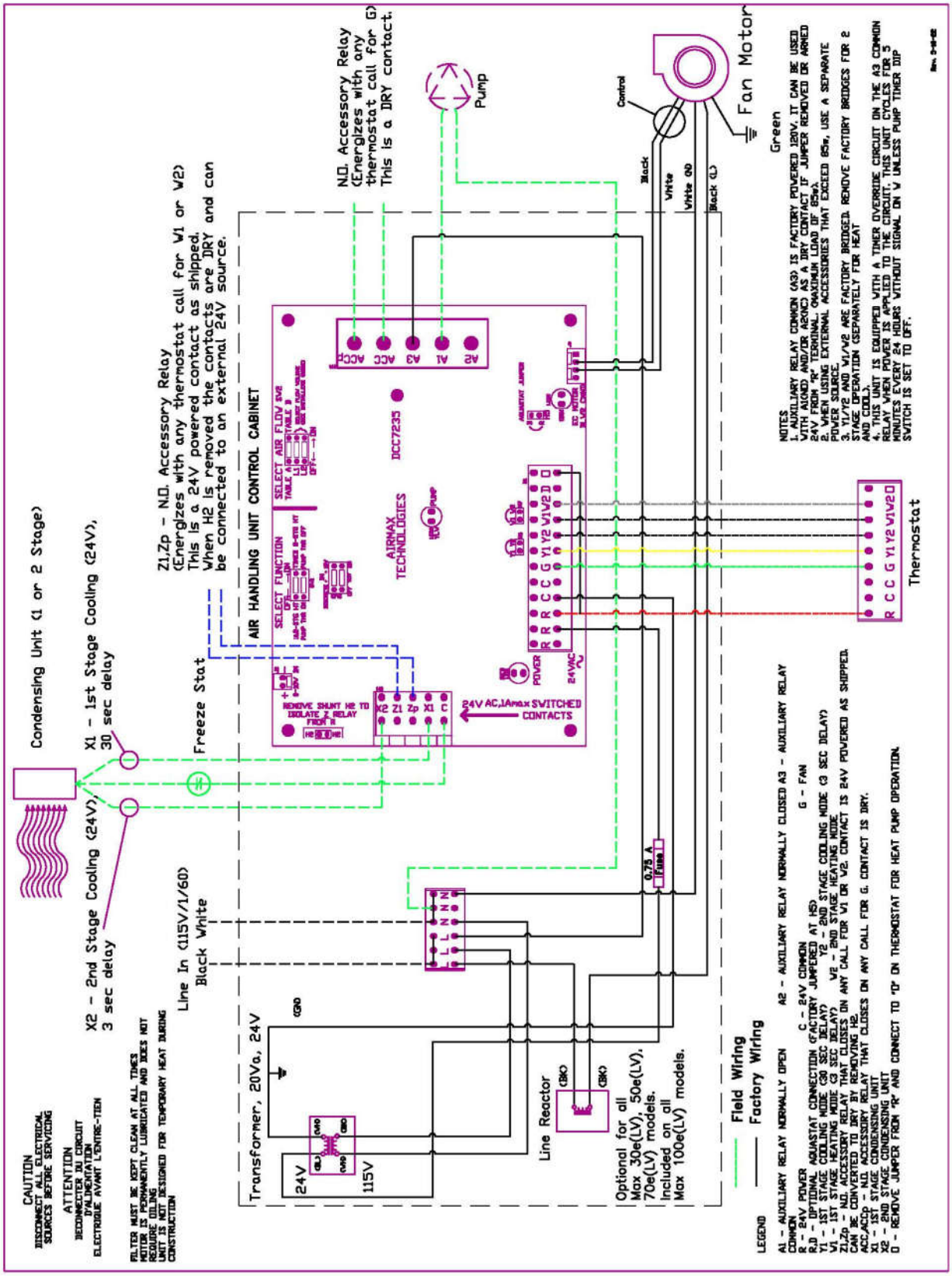

FAN COIL DIMENSIONS AND RETURN AIR SIZE & LOCATION .

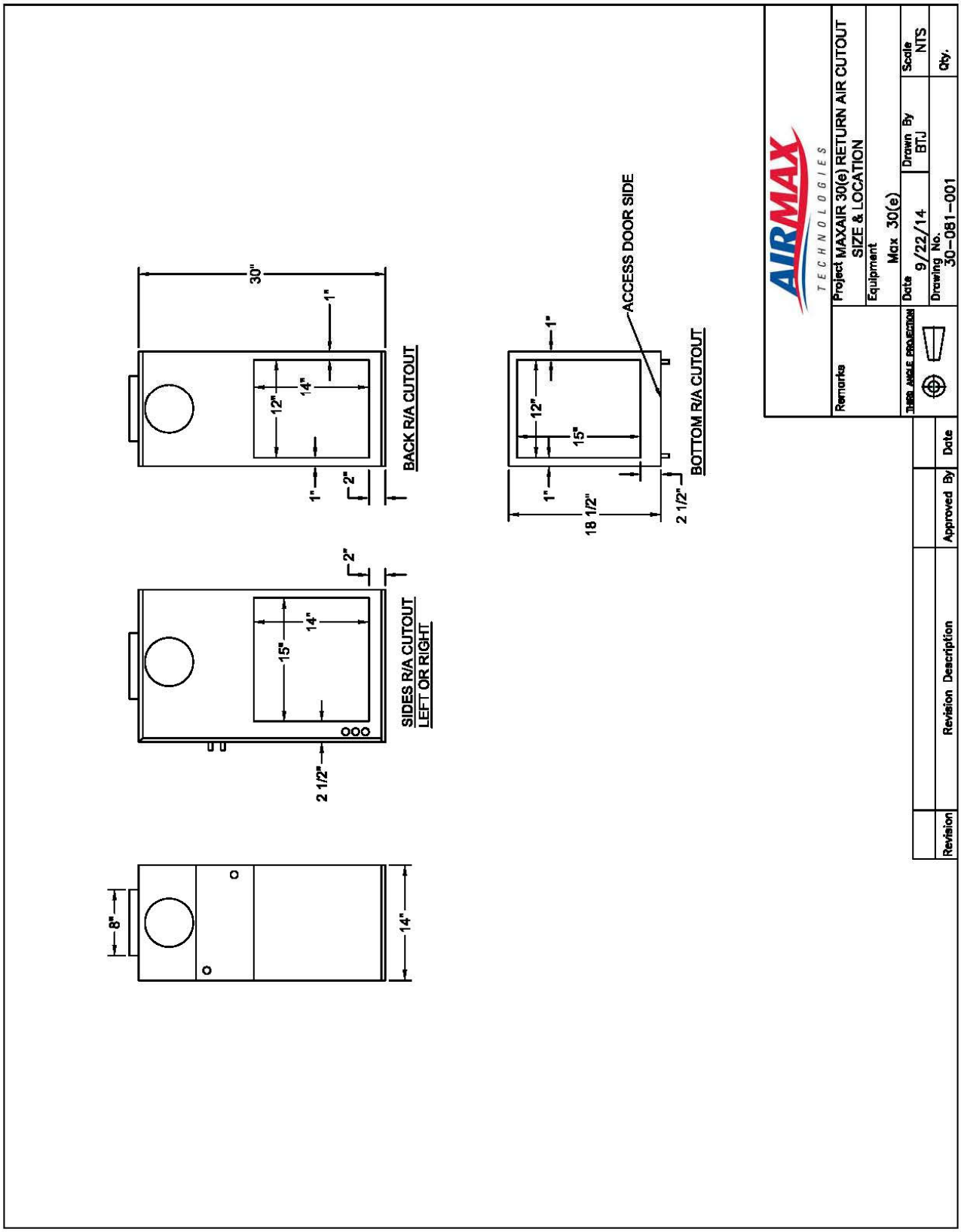

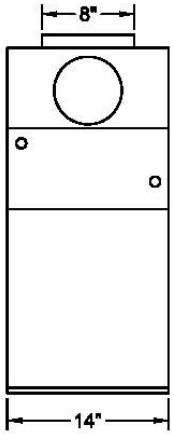

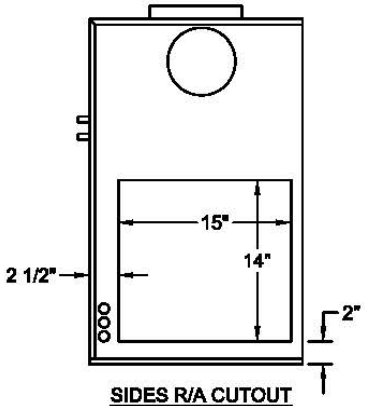

SIDES R/A CUTOUT
LEFT OR RIGHT

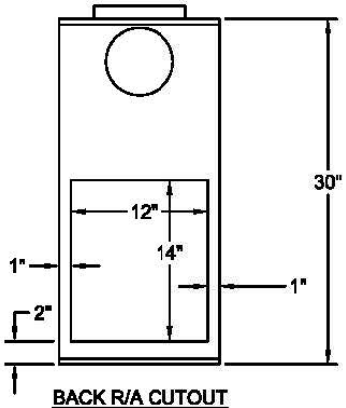

BACK R/A CUTOUT

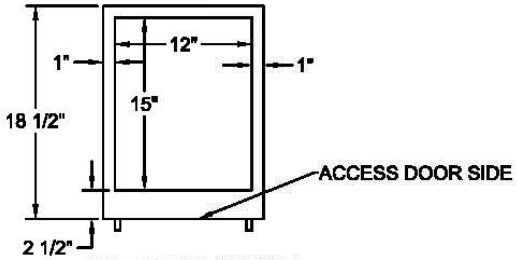

BOTTOM R/A CUTOUT

Revision	Revision Description	Approved By	Date

AIRMAX TECHNOLOGIES

Remarks	Project MAXAIR 50(e) RETURN AIR CUTOUT SIZE & LOCATION		
	Equipment Max 50(e)		
THIRD ANGLE PROJECTION	Date 9/22/14	Drawn By BTJ	Scale NTS
	Drawing No. 50-081-001		Qty.

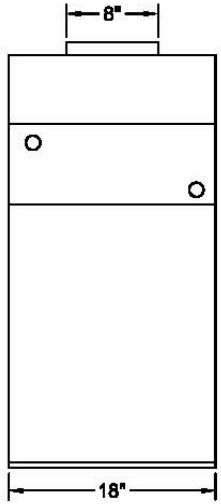

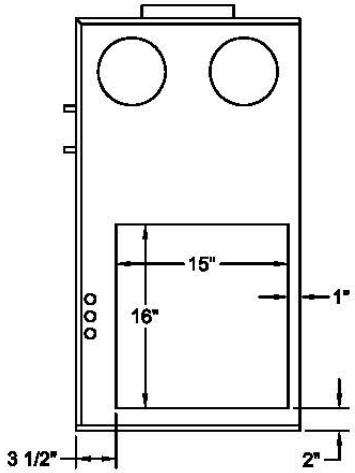

SIDES R/A CUTOUT
LEFT OR RIGHT

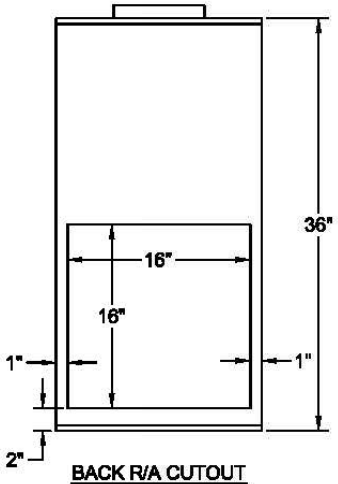

BACK R/A CUTOUT

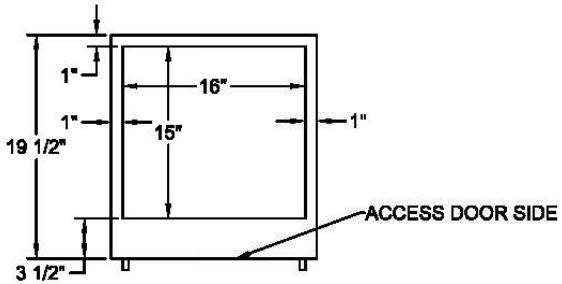

BOTTOM R/A CUTOUT

AIRMAX TECHNOLOGIES

Remarks	Project MAXAIR 70(e) RETURN AIR CUTOUT SIZE & LOCATION		
	Equipment Max 70(e)		
THIRD ANGLE PROJECTION	Date 9/22/14	Drawn By BTJ	Scale NTS
	Drawing No. 70-081-001		Qty.

Revision	Revision Description	Approved By	Date

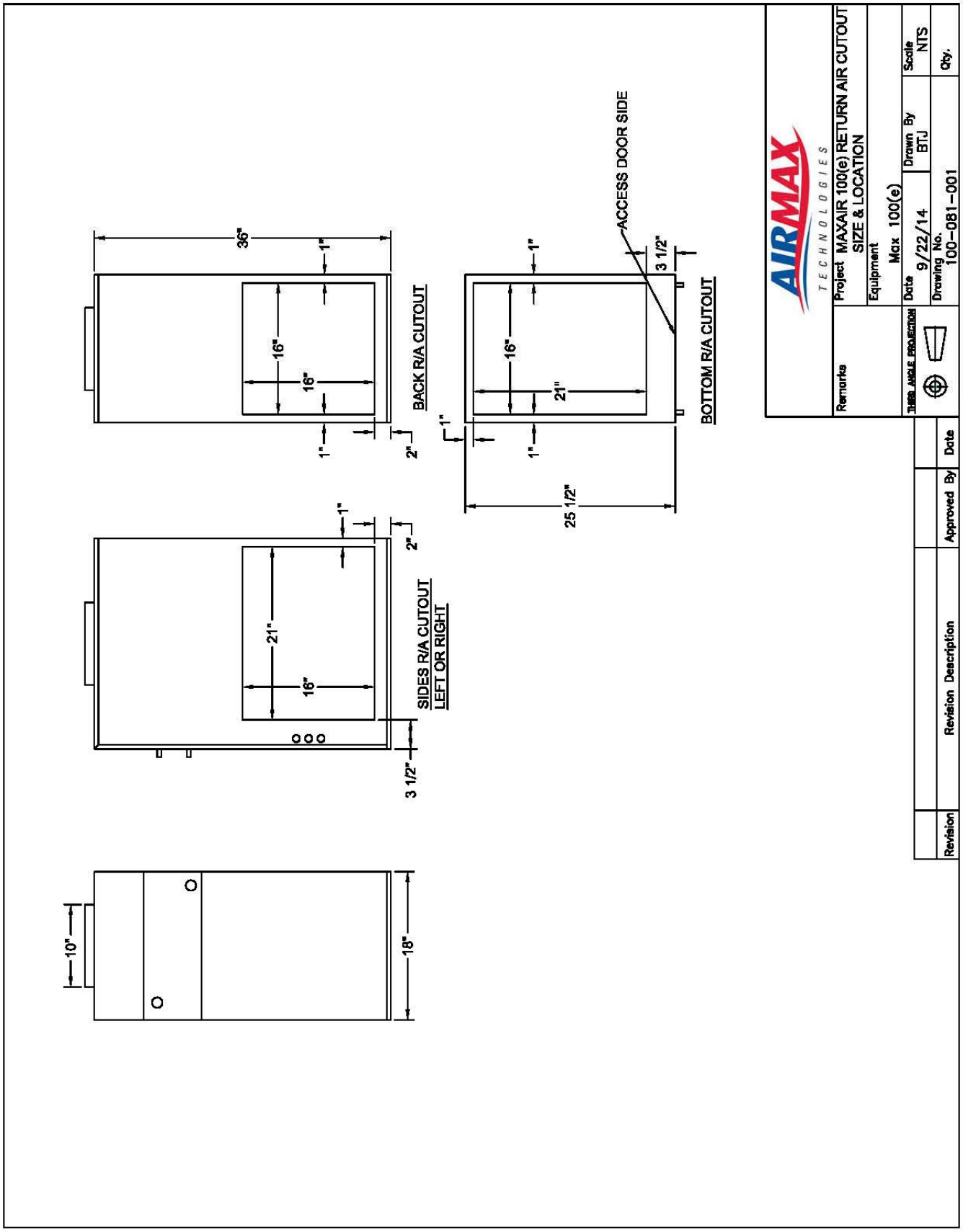
36"
1"
16"
16"
1"
2"
BACK R/A CUTOUT
1"
21"
16"
2"
3 1/2"
SIDES R/A CUTOUT
LEFT OR RIGHT
10"
18"
ACCESS DOOR SIDE
3 1/2"
1"
16"
21"
1"
1"
25 1/2"
BOTTOM R/A CUTOUT
AIRMAX
TECHNOLOGIES
Remarks
Project MAXAIR 100(e) RETURN AIR CUTOUT
SIZE & LOCATION
Equipment
Max 100(e)
Date 9/22/14
Drawn By BTJ
Scale NTS
Drawing No. 100-081-001
Qty.
THIRD ANGLE PROJECTION
Revision
Revision Description
Approved By
Date

HORIZONTAL AIR FLOW SPACE CONSTRAINED EVAPORATOR COIL SIZES .

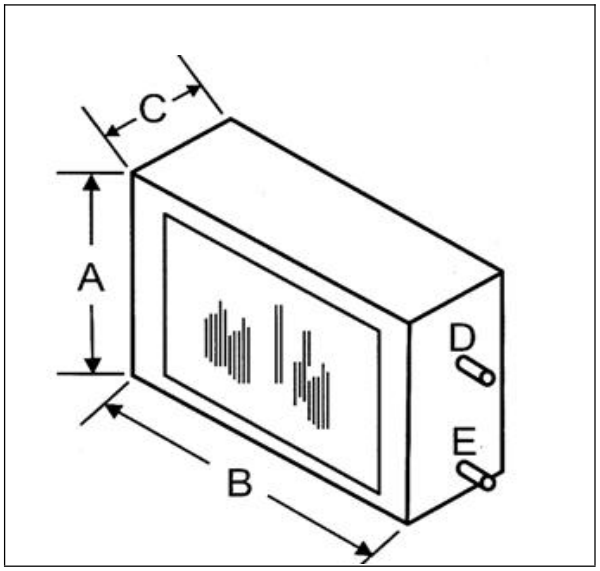

The coil module comes with a self adjusting thermal expansion valves (1T MA24-50-1– Metering device only), and an anti-ice control. The anti-ice control must be secured to the suction line as per instructions.

Note: All coils are to be sized to match the air handler.

COIL DIMENSIONS

Nominal Cooling Capacity	Model	Height (A)	Length (B)	Width (C)	Suction (D)	Liquid (E)	Weight (lbs.)	Nominal Cooling Airflow (cfm)	Coil Size
1 T	MA-24-50-1-R410-A	18"	19"	4.5"	3/4"	3/8"	15	400	11x16x2Rx10fpi
1 ½– 2 T	MA-24-50-R410-A	18"	19"	4.5"	3/4"	3/8"	15	600	11x16x4Rx10fpi
2 ½ T	MA-30-70-R410-A	18"	23"	4.5"	3/4"	3/8"	20	1000	15x16x4Rx10fpi
3 T	MA-36-100-R410-A	18"	23.5"	4.5"	3/4"	3/8"	25	1200	19x16x4Rx10fpi

All drains are ½" copper.

Care must be taken when mounting the Airmax Accessory slab coil to the side or back of a Airmax fan coil. This is acceptable only with the use of a minimum 6" spacer/transition. The short spacer/transition fitting will move the coil face away from the back of the fan/motor housing. Failure to do so will cause excessive or non-uniform velocity across the coil surface and may cause condensate to carry over into the fan coil cabinet.

Please note the nominal air flow of the coil in the table above. Exceeding this air flow may cause condensate carry over. If there is an expectation the air flow could exceed this value reduce the fan motor speed setting as described in this manual only if other aspects of the design allow. Alternatively, use the Airmax cased "A" coil in this manual.

50/70/100 CCFF-001 COOLING COIL FILTER FRAME CABINET .

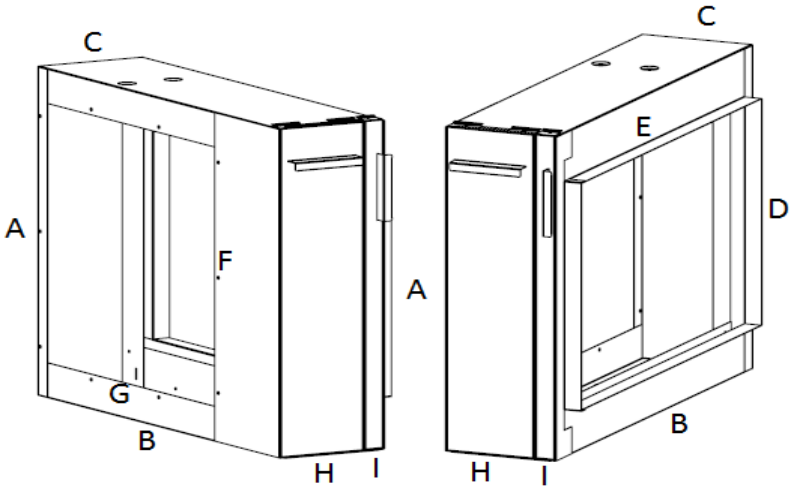

MODEL	A	B	C	D	E	F	G	H	I
50-CCFF-001	20″	20″	6 ¼″	14″	18″	15 3/4"	15″	5″	1 ¼″
70-CCFF-001	20″	25″	6 ¼″	14″	23″	15 3/4"	17 1/4"	5″	1 ¼″
100-CCFF-001	20″	25″	6 ¼″	14″	23″	15 3/4"	20 3/4"	5″	1 ¼″

Cooling Coil Filter Frame: Cooling coil filter frames accept a standard dimensional 1” filter. The coil section has dimples pressed into the top and bottom of the cabinet to ensure proper coil slope.

50-CCFF-001 cooling coil/filter frame 20” x 20” x 6-1/4” deep (accepts 16 x 20 x 1 filter), Return air connection is (14 x 18). Use with 30 & 50 series

70-CCFF-001 cooling coil/filter frame 20” x 25” x 6-1/4” deep (accepts 16 x 25 x 1 filter, Return air connection is (14 x 23). Use with 70 series

100-**CCFF-001** cooling coil/filter frame 20” x 25” x 6-1/4” deep (accepts 16 x 25 x 1 filter, Return air connection is (14 x 23). Use with 100 series

VERTICAL AIR FLOW EVAPORATOR COILS .

AIRMAX INTAKE PLENUM/A-COIL MODEL	50-IPCE-18A
1.0 Ton Split-System Component Compatibility①	
Airmax ACU Condensing Unit Model	ACU-12e-1
MAXAIR™ Air Handler Model	30e (LV)
Cooling Indoor Airflow CFM	350 - 425
1.5 Ton Split-System Component Compatibility①	
Airmax ACU Condensing Unit Model	ACU-18e-1
MAXAIR™ Air Handler Model	50e (LV)
Cooling Indoor Airflow CFM	550 - 650
2.0 Ton Split-System Component Compatibility①	
Airmax ACU Condensing Unit Model	ACU-24e-1
MAXAIR™ Air Handler Model	50e (LV)
Cooling Indoor Airflow CFM	550 - 650
Evaporator Coil Data - Type	Enhanced Plate Fin
Face Area (sq.ft.)	3.10
Rows / F.P.I.	2 / 18
Refrigerant Control	TXV
Refrigerant	R-410A
Connection Sizes	
Liquid – ODS (inches)	3/8
Suction Gas – ODS (inches)	3/4
Condensate Drain (Primary and Secondary)	3/4 NPT
Plenum/Enclosure Dimensions – H X W X D (in.)	35.5 X 14.0 X 22.0
Maximum Recommended R/A Opening Size (in.)	14.0 X 18.0
Minimum Recommended Filter Size (in.)	14 X 20 X 1
Shipping Weight (Lbs.)	45

① Published performance achieved through the use of matched system components as indicated.

AIRMAX INTAKE PLENUM/A-COIL MODEL	70-IPCE-24A	70-IPCE-30A
2.0 Ton Split-System Component Compatibility①		
Airmax ACU Condensing Unit Model	ACU-24e-1	
MAXAIR™ Air Handler Model	70e (LV)	
Cooling Indoor Airflow CFM	750 - 825	
2.5 Ton Split-System Component Compatibility①		
Airmax ACU Condensing Unit Model		ACU-30e-1
MAXAIR™ Air Handler Model		70e (LV)
Cooling Indoor Airflow CFM		930 - 980
Evaporator Coil Data - Type	Enhanced Plate Fin	Enhanced Plate Fin
Face Area (sq.ft.)	3.55	4.00
Rows / F.P.I.	2 / 18	2 / 18
Refrigerant Control	TXV	TXV
Refrigerant	R-410A	
Connection Sizes		
Liquid – ODS (inches)	3/8	
Suction Gas – ODS (inches)	3/4	
Condensate Drain (Primary and Secondary)	3/4 NPT	
Plenum/Enclosure Dimensions – H X W X D (in.)	43.5 X 18.0 X 22.0	
Maximum Recommended R/A Opening Size (in.)	18.0 X 18.0	
Minimum Recommended Filter Size (in.)	20 X 20 X 1	
Shipping Weight (Lbs.)	52	56

① Published performance achieved through the use of matched system components as indicated.

The coil comes with a self adjusting thermal expansion valve shipped loose for field installation. An anti-ice control is sold as an option. The anti-ice control must be secured to the suction line as per instructions. **Note: All coils are to be sized to match the air handler.**

1, 1.5, 2 TON EVAPORATOR COIL SIZES (50-IPCE-18A) .

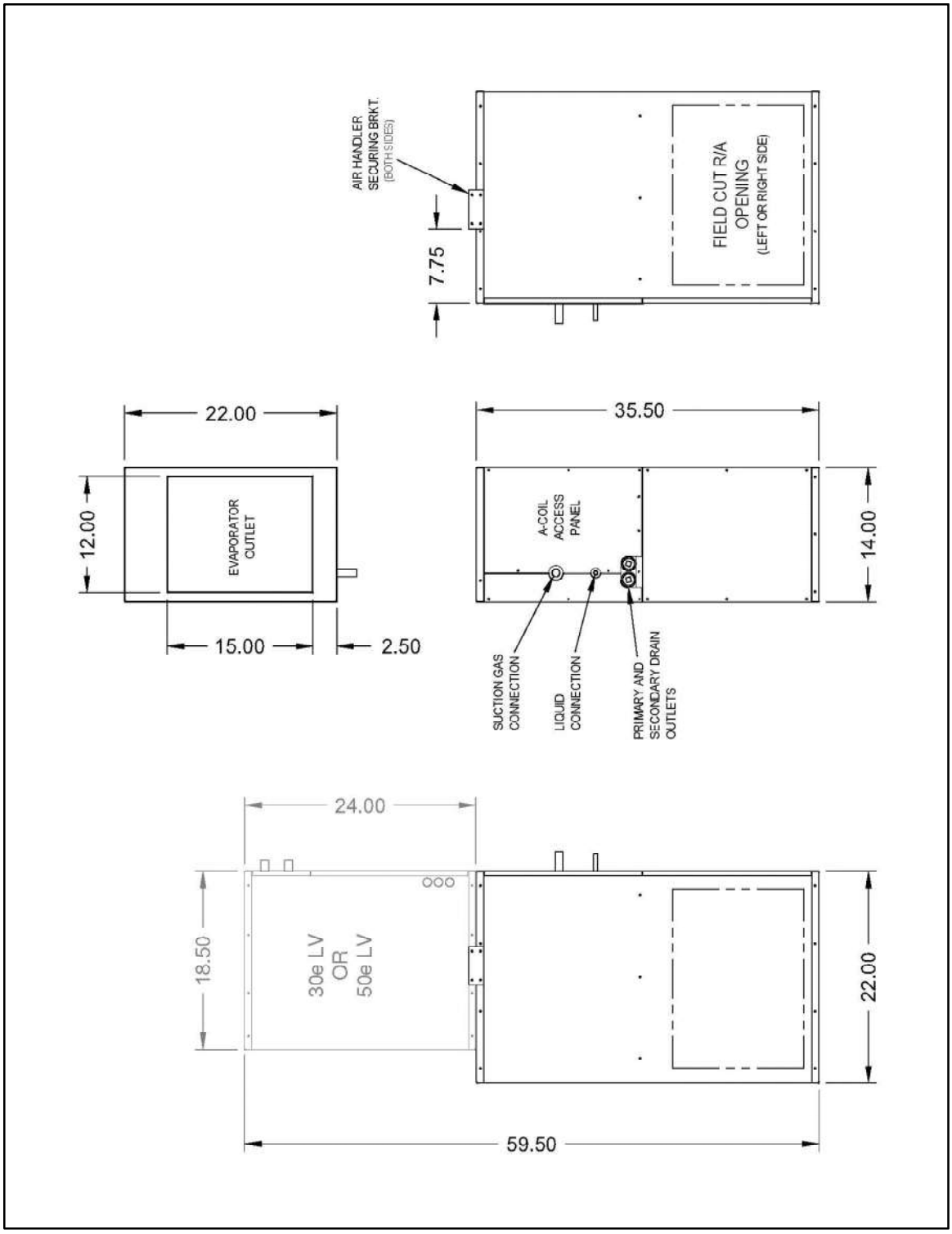

2 AND 2.5 TON EVAPORATOR COIL SIZES (70-IPCE-24/30A) .

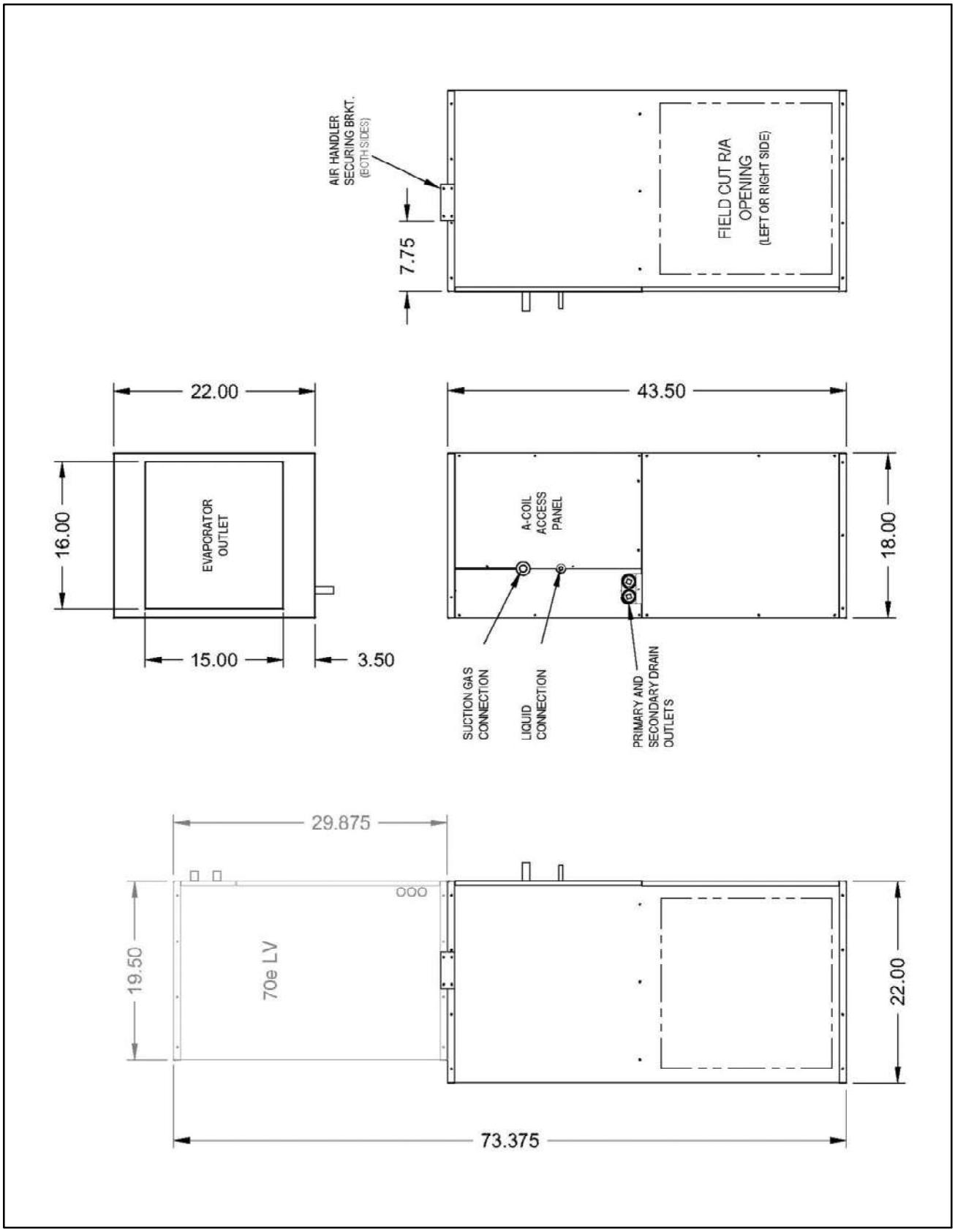

SAMPLE PIPING SCHEMATICS .

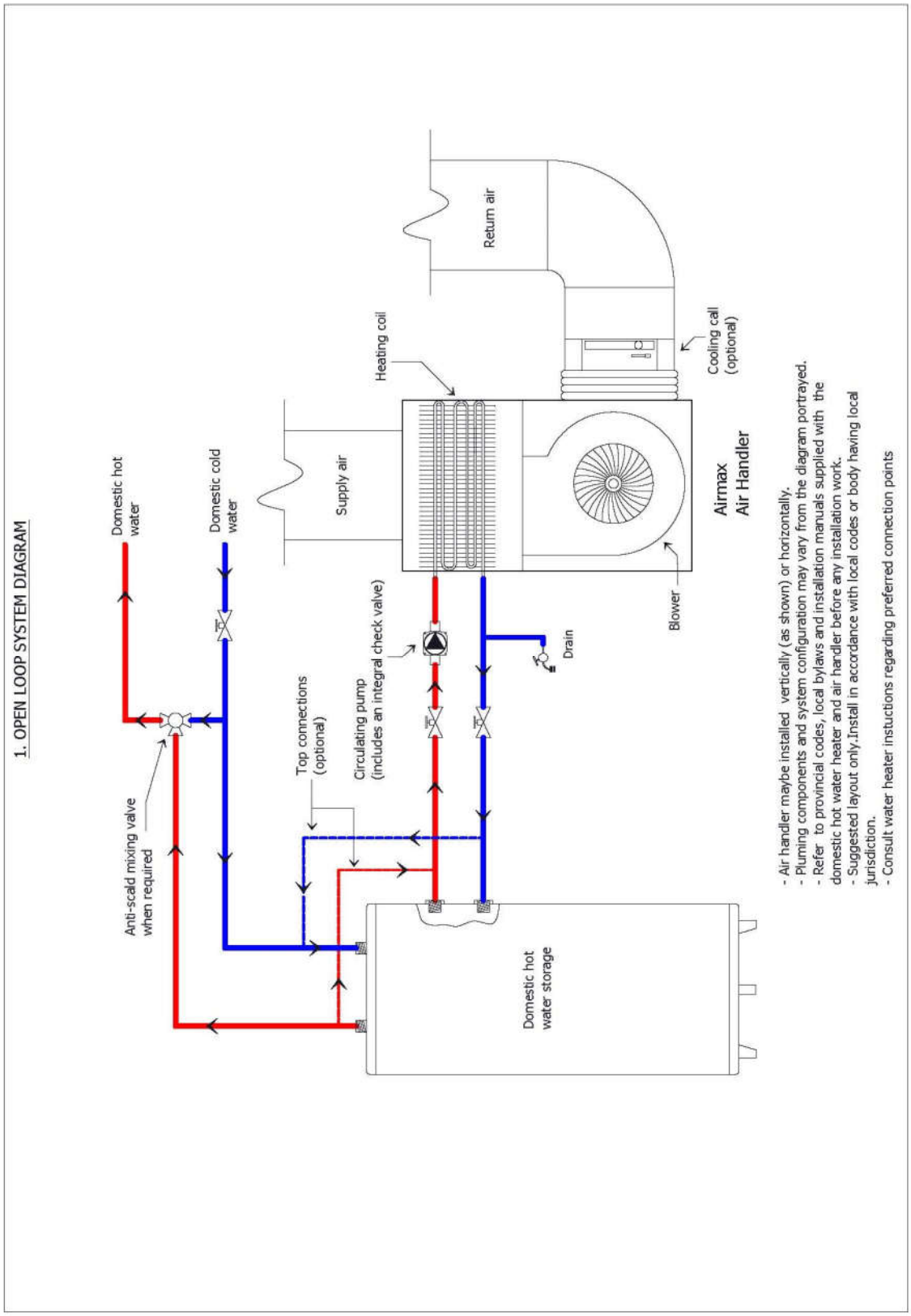

2. CLOSED LOOP SYSTEM DIAGRAM

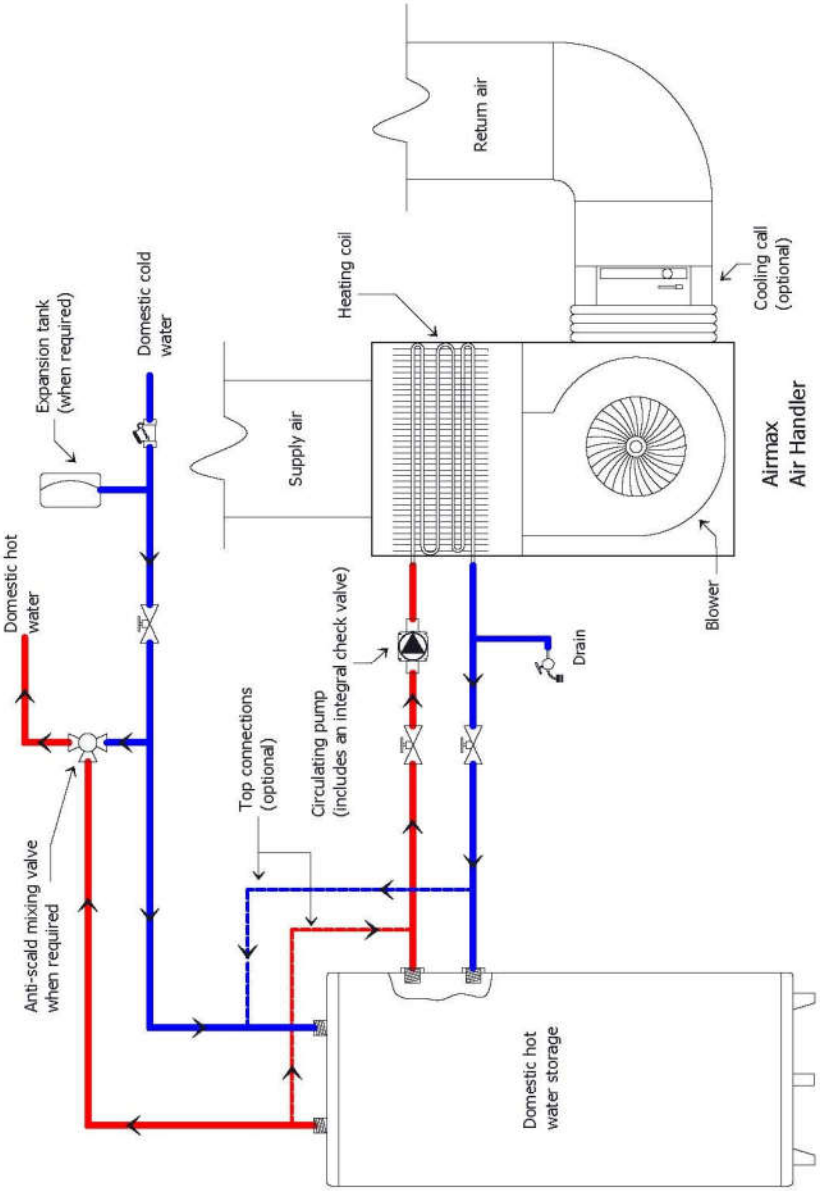

- Air handler maybe installed vertically (as shown) or horizontally.
- Pluming components and system configuration may vary from the diagram portrayed.
- Refer to provincial codes, local bylaws and installation manuals supplied with the domestic hot water heater and air handler before any installation work.
- Suggested layout only.Install in accordance with local codes or body having local jurisdiction.
- Consult water heater instuctions regarding preferred connection points

3. DPWH + AIRMAX + STORAGE TANK

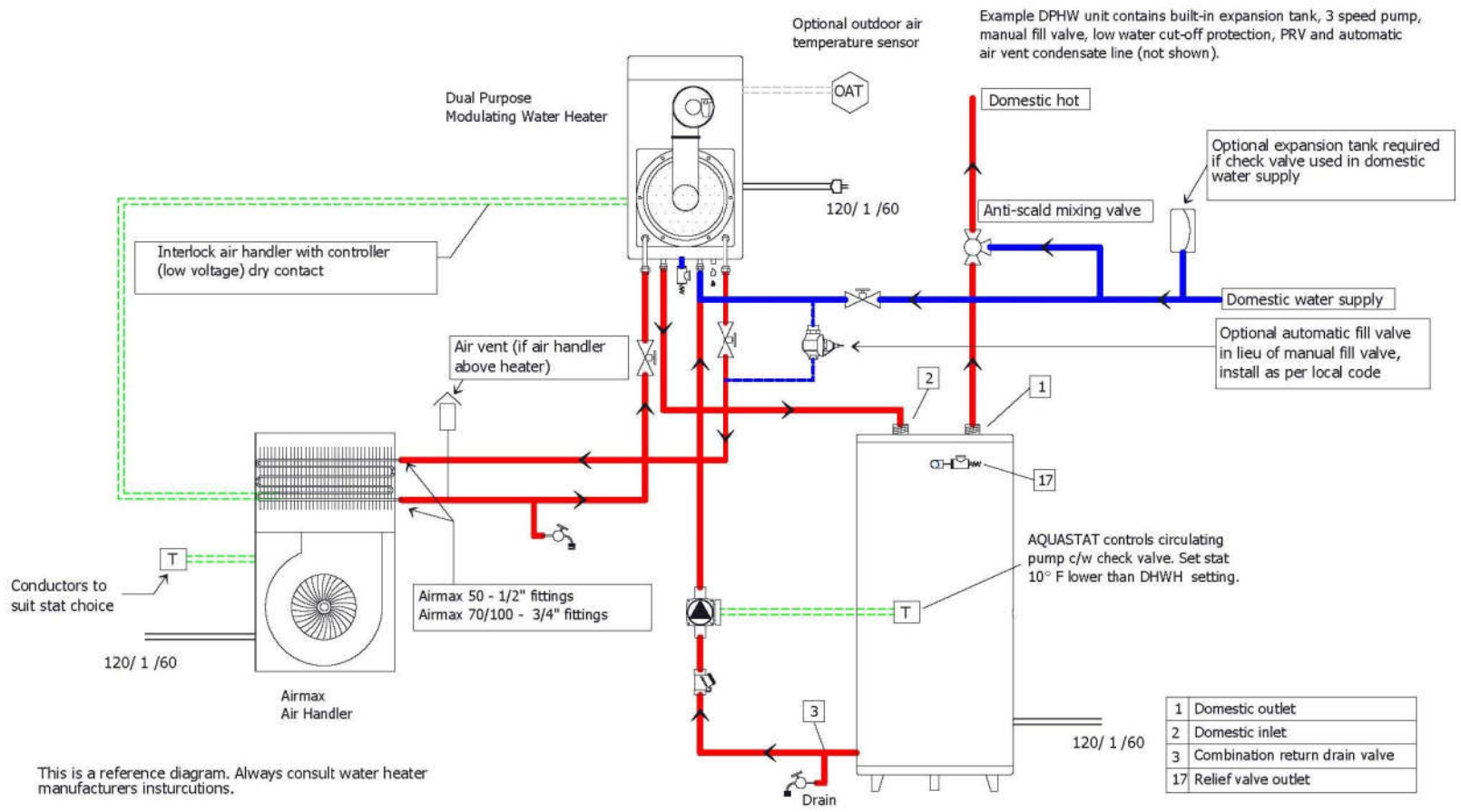

1	Domestic outlet
2	Domestic inlet
3	Combination return drain valve
17	Relief valve outlet

This is not an engineering drawing; it is intended only as a guide and not as a replacement for professional engineered drawings. This drawing is not intended to describe a complete system. It is up to the contractor or engineer to determine the necessary components and configurations of the particular system to be installed. This drawing does not imply compliance with local building code requirements. It is the responsibility of the contractor or engineer to ensure that local building code requirements are meet.

4. DPHW + AIRMAX + STORAGE TANK (PRIMARY+SECONDARY)

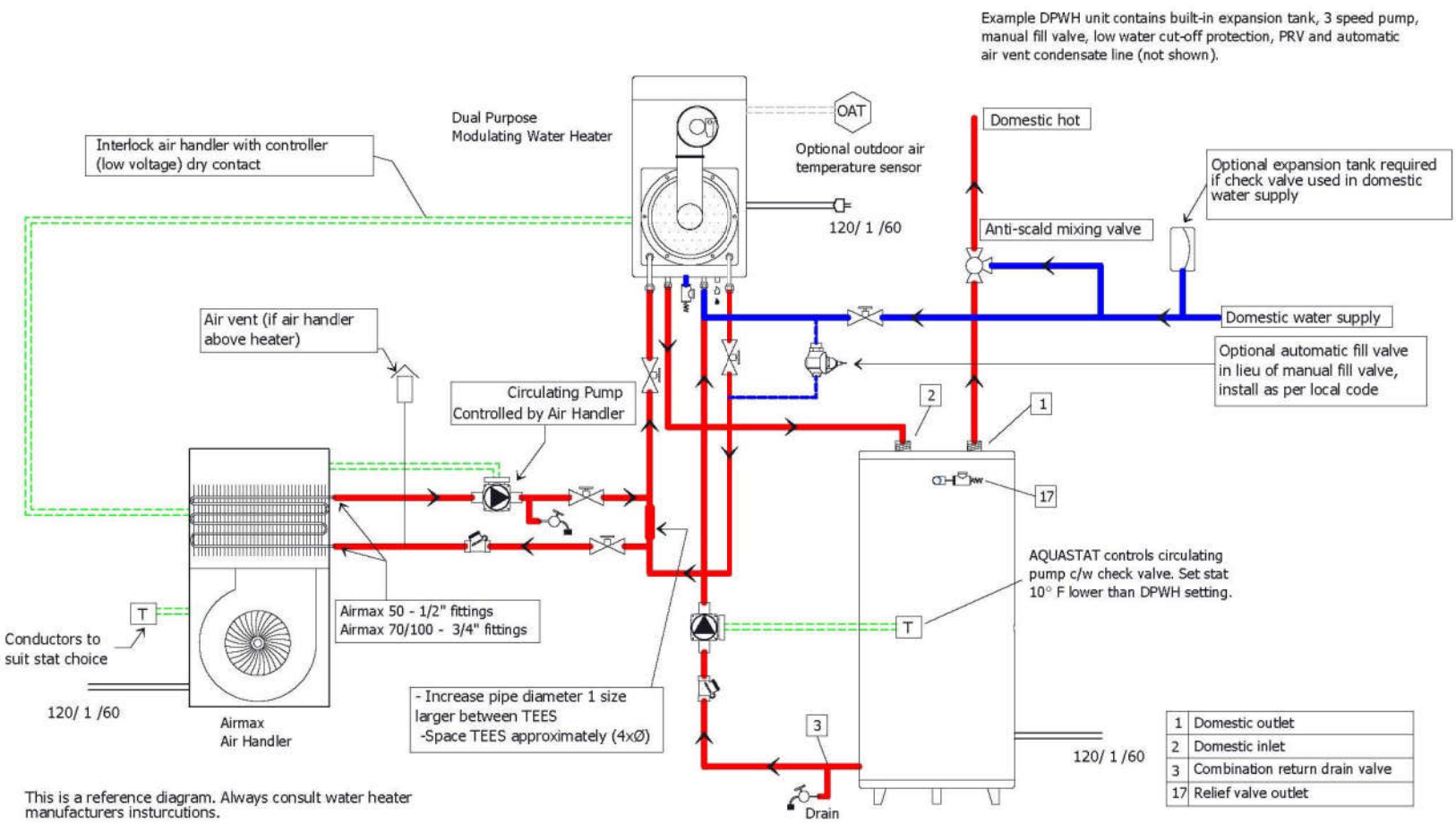

1	Domestic outlet
2	Domestic inlet
3	Combination return drain valve
17	Relief valve outlet

This is not an engineering drawing; it is intended only as a guide and not as a replacement for professional engineered drawings. This drawing is not intended to describe a complete system. It is up to the contractor or engineer to determine the necessary components and configurations of the particular system to be installed. This drawing does not imply compliance with local building code requirements. It is the responsibility of the contractor or engineer to ensure that local building code requirements are meet.

Terms and Conditions of Sale

E-mail: info@airmaxtechnologies.com
Web Site: www.airmaxtechnologies.com

Warranty: Warranty period is twelve (12) months from date of purchase. Warranty includes parts and labor (check with AirMax Technologies Inc. for labor allowance rates). Cost of returning the goods to AirMax Technologies Inc. is by others. All warranty parts are to be prepaid by the customer. No warranty will be in effect until the equipment is paid for in full. Warranty on all equipment sold to customer may be suspended, at AirMax Technologies Inc.'s disgression, until the customers account is in good standing. Warranty covers defective components only. Normal wear and abuse is not covered. The customer's account will be credited only after the defective part has been examined by AirMax Technologies Inc. or the vendor and determined to be defective.

Claims: Claims for damages and shortages must be made within two (2) days of receipt of goods. It is the responsibility of the receiving party to check count and condition of goods. The receiving party's signature on the shipping copy of the invoice or bill of lading absolves AirMax Technologies Inc. of responsibility for count and condition unless damage is concealed. In the case of damages or shortages, it is the responsibility of the receiving party to claim against the carrier if other than AirMax Technologies Inc.

Returns: Written permission must be obtained for return of all goods. All returns will be subject to a 25% restocking charge. All returns are to be prepaid. When returning goods, please quote the invoice number on which the goods were purchased, product serial number, and the return goods number issued by AirMax Technologies. Special or custom order equipment may not be returned for credit. Any products or components must be returned to AirMax Technologies Inc. free and clear of liens or other encumbrances.

Limitations on Liability: This warranty does not cover and no warranty is made with respect to;

A. Failures not reported to AirMax Technologies within the time period specified above.
B. Failures or damage due to misapplication, misuse, abuse, improper storage, improper installation, or handling, abnormal conditions of temperature, water, dirt, corrosive substances, or other contaminants.
C. Products which have been repaired with parts or materials not furnished or approved by AirMax Technologies Inc. or by its authorized dealers or representatives, or products which have been in any way tampered with or altered.
D. Products damaged in shipment or storage or otherwise without fault of AirMax Technologies Inc..

AirMax Technologies Inc.'s total responsibility for any claims, damages, losses, or liabilities related to the product covered hereunder shall not exceed the purchase price of such product. In no event shall AirMax Technologies Inc. be liable for any special, indirect, incidental, or consequential damages of any character, including but not limited to loss of productive facilities or equipment, delay of construction schedule, lost profits, property damage, transportation, installation or removal, lost production, or personal injury whether suffered by the purchaser or any third party. AirMax Technologies Inc. disclaims all liability for any and all costs, claims, demands, charges, expenses, or other damages, either direct or indirect, incidental to personal injury or property damage arising out of any cause of action based on strict liability.

Freight: Prepaid and bill, FOB Factory

Payment Terms: 2% 10 days. Net 30 days (O.A.C.). 2% service charge will be applied to overdue accounts.

Taxes: All taxes extra

All prices, terms, and conditions are subject to change without notice.

Warranty Registration

E-mail: info@airmaxtechnologies.com
Web Site: www.airmaxtechnologies.com

PLEASE COMPLETE THE FOLLOWING INFORMATION AND RETURN WITHIN 30 DAYS OF THE UNIT START UP AND INCLUDE A COPY OF THE EQUIPMENT COMMISSION FORM FOR EACH PIECE OF EQUIPMENT.

Sold To:

Company Name _____

Contact Name _____

Address _____

City _____ State/Province _____ Zip/Postal Code _____

Phone No. _____ Fax _____

Item Purchased:

Unit Model _____ Serial No. _____

Date of Purchase _____ Date of Start up _____

Installer _____

Purchased From:

Company Name _____

Contact Name _____

Signature _____ Date _____

To insure your warranty protection, please complete and return this form to AirMax Technologies Inc. attention Product Registration.

Warranty Parts Request Form

E-mail: info@airmaxtechnologies.com
Web Site: www.airmaxtechnologies.com

Homeowner Name:_____ **Date:**_____

Address:_____ Unit # _____

City:_____ Prov._____ Postal Code: _____

Phone #_____ Other #_____

Contractor Name:_____

Address:_____ Unit # _____

City:_____ Prov._____ Postal Code: _____

Phone #_____ Other #_____

Email:_____

Distributor / Rental Provider Name:_____

Address:_____ Unit # _____

City:_____ Prov._____ Postal Code: _____

Phone #_____ Other #_____

Email:_____

Model Number:_____**Serial number**:_____

Date installed:_____ Date Failed:_____ Date Serviced:_____

Failed Part Number:_____Replacement Part Number:_____

Failed Part Description:_____

Reason for Failure:_____

_____

_____

_____

"FAILED, NOT WORKING, DEFECTIVE" etc. is not acceptable and will be considered incomplete. Incomplete warranty forms will not be accepted or considered; **only a detailed explanation of the component failure will be considered for warranty.**

All parts returned must be accompanied with a completed warranty tag.

209 Citation Drive, Units 5 & 6, Concord, ON, Canada, L4K 2Y8, Tel: 905-264-1414, Fax: 905-264-1147

TEMPORARY HEAT DURING CONSTRUCTION .

In order to ensure that the equipment will be protected during the construction stage and so the warranties on the equipment are not affected, the following steps must be followed prior to starting up the unit :

- Installation of a MERV 8 (minimum) filter prior to starting of the unit
- Replace the filter at least every two weeks during the construction stage
- New filter installed prior to occupancy
- Insulation must be completed
- Drywall finished with base coat of paint
- Sub-floor must be installed (sanded and screwed in place)

Warranty will not be covered if these steps are not followed prior to start up.